HEAT EXCHANGE

ESKM

Catalogue

Heat exchange solutions

Contents

Award of ROSATOM Group, 2014

ESKM Corporation - the best specialized construction company of the nuclear industry

1.

About the company

Today, Corporation of the JSC “ESKM” is a diversified company with a central office in Krasnodar and representative offices in Moscow, Novovoronezh, Volgodonsk, Zarechny (Sverdlovsk region), Ostrovets (Republic of Belarus).
The independent subdivisions of the Corporation (installation, electrical installation, pre-commissioning and installation & commissioning managements, special heat-power management and training center) are located in different cities of Russia.

“ESKM” – so shortly and recognizable call us whose with and for whom we work.
In 2015, was 30 years as our company has been performing the complex of work regarding to installation, repair and adjustment of electricals and I&C and A on thermal and nuclear power plants, substations of different types, objects of construction industry in Russian and overseas.

Annual participation in electrical installation and commissioning works – at more than 30 objects. The geography of work in Russia: from Kaliningrad to Kamchatka, foreign construction objects – all these are the evidence of stable development of ESKM.

30
years

№1
in electric installation

Current objects

- Novovoronezhskaya NPP-2 (unit No.1, No.2)
- Rostovskaya NPP (unit No.4)
- Beloyarskaya NPP (unit No.4)
- Belarusian NPP (unit No.1, No.2)
- Kurskaya NPP–2
- Leningradskaya NPP-2 (unit No.1

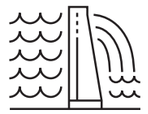

- Cherepetskaya GRES
- Berezovskaya GRES (unit No.3)
- Novocherkasskaya GRES
- Nizhnetourinskaya GRES
- Yakutskaya GRES-2
- Sakhalinskaya GRES-2

- CHP-Central, Saint-Petersburg
- CHP Sovetskaya Gavan
- Power plant of complex «Yamal LNG»
- Sevastopol steam-and-gas installation-TPP
- Simferopol steam-and-gas installation-TPP
- Tuapse petroleum refinery

ESKM carries out the following activities:

- designing of heat exchange equipment and development of an accompanying nomenclature;
- designing of electrical equipment;
- designing of cable metal structures;
- development of production and installation documentation;
- manufacturing of the equipment of various complexity levels with application of modern technologies;
- applying of different corrosion-resistant paint and varnish materials on modern semi-automated equipment;
- applying of corrosion-resistant metal covering, using the method of hot galvanizing;
- equipment installation;
- warranty and after-sales service;
- training of specialists on the basis of modern technical means in the training course center.

1. About the company

Head office of ESKM Corporation (city: Krasnodar)

Production complex ZESKMI (city: Krasnodar)

Installation of sensors

Rostovskaya NPP

Installation of the bushing

Preparation to installation of the bushing

Beloyarskaya NPP

Novovoronezhskaya NPP

About the company

Geography of projects

Nuclear power:

1. Leningradskaya NPP-2, Units Nos.1, 2
2. Rostovskaya NPP, Units Nos.1, 2, 3, 4
3. Kaliningradskaya NPP, Units Nos.3, 4
4. Novovoronezhskaya NPP-2, Units Nos.1, 2
5. Beloyarskaya NPP, Unit No.4
6. Baltiyskaya NPP, Unit No.1
7. Kurskaya NPP-2, Unit No.1
8. Belarusian NPP, Units No.1, 2
9. Bushehr NPP (Iran)
10. Lovisa NPP (Finland)
11. Kudankulam NPP (India)
12. Tianwan NPP (China)

Thermal Power:

13. Novocherkasskaya GRES
14. GTI Tuapse refinery
15. HPP-20, city: Moscow
16. HPP-21, city: Moscow
17. HPP-26, city: Moscow
18. HPP-27, city: Moscow
19. HPP-16, city: Moscow
20. TPP MMDC “Moscow-City”
21. GTPP “Kolomenskoye”
22. Novomoskovskaya GRES
23. The State Academic Bolshoi Theater of Russia
24. Beryozovskaya GRES
25. Nizhneturinskaya GRES
26. Yakutsk GRES-2
27. Sakhalinskaya GRES-2
28. Cherepetskaya GRES
29. Novourengoy gas chemical complex
30. Sochinskaya TPP
31. Severo-Zapadnaya HPP
32. Yuzhnaya HPP-22
33. Pervomaiskaya HPP-14
34. Mutnovskaya GeoTPP
35. Krasnodarskaya HPP
36. Nevinnomysskaya GRES
37. Tumen HPP-1
38. Surgutskaya GRES-2
39. Kursk Boiler House
40. Chelyabinskay HPP-1
41. Dzhubginskaya TPP
42. Nizhnevartovskaya GRES
43. Belgorodskaya HPP
44. Sredneuralskaya GRES
45. Adlerskaya TPP
46. Yuzhnouralskaya GRES
47. Kaliningradskaya HPP-2
48. GTPP “Novokuznetskaya”
49. Stavropolskaya GRES
50. System of Zelenchukskiye HPPs
51. Ivanovskaya GRES
52. Reftinskaya GRES
53. Chirkeyskaya WPP
54. Miatlinskaya WPP
55. Multan TPP (Pakistan)
56. Isphahan TPP (Iran)
57. Yusifiya TPP (Iraq)
58. TPP (Algeria)
59. Bishkek HPP-1 (Kirgizia)
60. Barkh TPP (India)
61. Yong Bi TPP (Vietnam)
62. Azerbaijan GRES
63. Tbilisi GRES
64. Tsentralnaya HPP, city: St.-Petersburg
65. Sovetskaya Gavan HPP
66. Power Plant of “Yamal LNG” Complex
67. Simferopol SGI-TPP
68. Sevastopol SGI-TPP

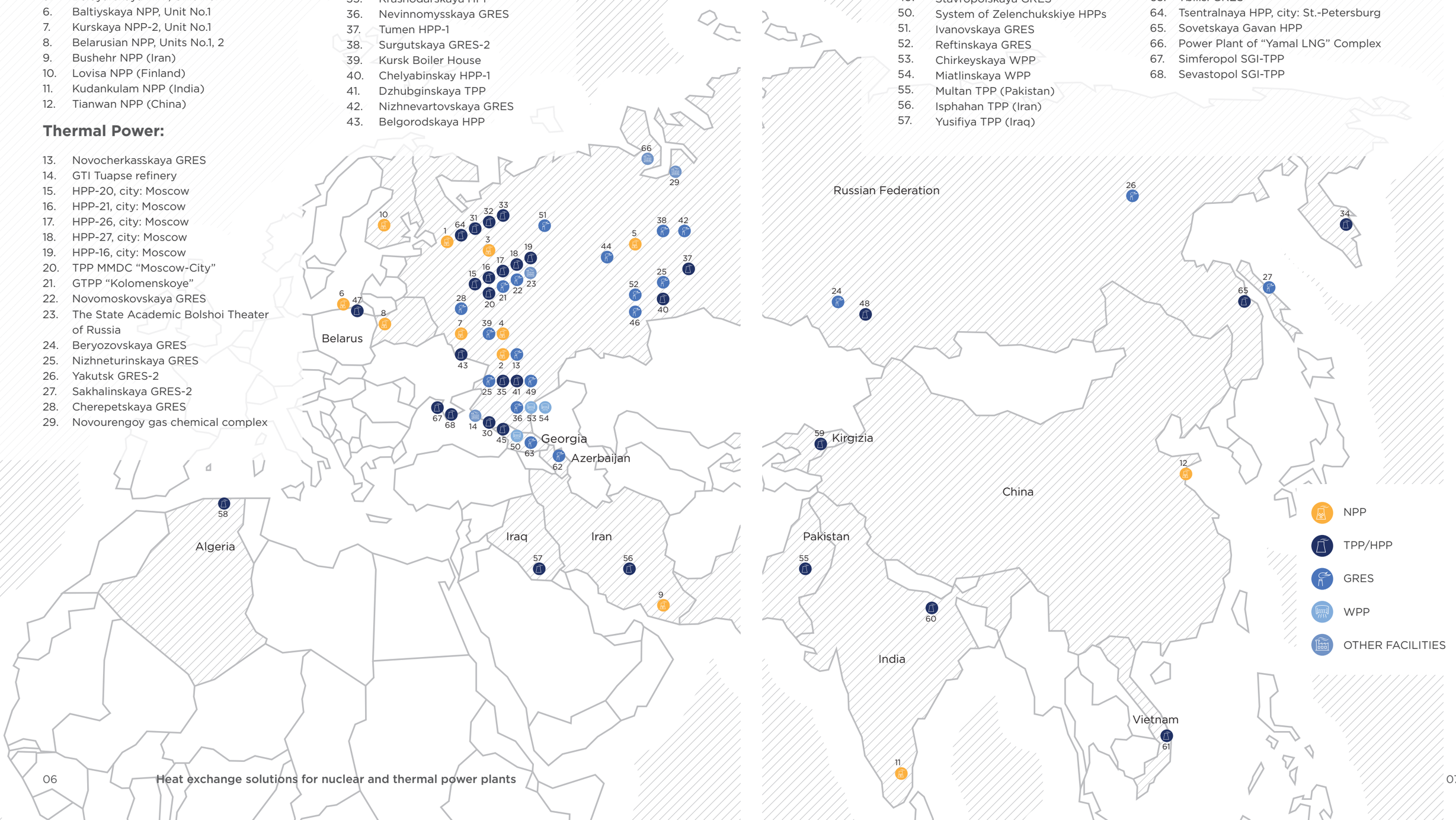

Production opportunities

2.

Production opportunities

Production buildings of “ESKMI Factory” are located in Krasnodar on the territory of a total area more than 15 hectares. Each workshop is equipped with modern, reliable machines and welding equipment (including those with digital control of well-known European and Asian manufacturers), hoisting mechanisms in the total amount of more than 300 units.

This production complex allows to manufacture a wide range of heat exchange equipment, electrical installation products and cable metal structures, which “ESKM” successfully supplies to nuclear and thermal power facilities not only in Russia, but to NPPs and TPPs in India, Iran, Iraq, China and Croatia as well.

This helps to achieve a significant reduction in dependence on the third-party suppliers, optimization of logistics. Flexible approach to manufacturing and differentiation of production flows between production units allows to produce equipment of any complexity in optimal time.
As the result of the development of any manufacturing enterprise of machine-building, construction and electrical industries, production sites (workshops) were formed at the factory as per line of activities. Functioning conditions – are meeting the requirements regarding to manufacturing control and items quality, environmental and industrial safety of production.

300
specialists

750 t
metal per month

15 ha
production area

300 units
equipment

2.

Production opportunities

Metal structures workshop

These are three production buildings, where more than 7000 tons of metal are processed per year. For the last three years, the factory increased the production capacity twice. Metal structures workshop – is the most numerous, more than 100 professionals employ in the relevant specialties today.

100

7000 t

Hot galvanizing workshop

The productivity of hot galvanizing workshop is 5000 tons of metal structures per year. ESKMI factory uses the technology and the equipment of English company HASCO-Thermic, which allows to apply covering with thickness up to 200 mkm.

5000 t

200 mkm

Painting workshop

Today, painting workshop is equipped with a linear complex of surface preparation and coverings by various methods (powder and liquid paint and varnish materials) with automated control system of model TR-F-VE-AP-NS of TAISS S.r.l. (Italy). This complex allows to apply all types of paint and varnish coverings (epoxy, organosilicate, alkyd, etc.) of wide range of application (chemically resistant, heat-resistant, radiation-resistant and deactivated), of any thickness and color. The productivity of line dyeing by liquid paint and varnish materials are 5000 tons of items per year.

Workshop of optional equipment (OE)

Workshop of optional equipment (OE) –production equipped with modern welded aggregate and metal-working machines with numerical program control. ESKM takes into account the specific of each object, and products at the factory are often manufactured individually for a concrete thermal or nuclear power plant.

5000 t
units per year

Metal structures workshop

Metal structures workshop

Metal structures workshop

Painting workshop

Workshop of low-voltage switchgears (LVS)

Today, equipment of the workshop and professional level of personnel allow to perform electrical assemblies with rated current up to 3200 A. The use of components of world's leading manufacturers (Schneider Electric, HARTING, Weidmuller, etc.) allow to work at a modern level with full compliance with the requirements of State Standard and stay competitive in these direction. Output of items – is more than 5000 units per year.

5 000
units

3200 A

2.

Production opportunities

During production of gasketed plate heat exchangers ESKM applies plates of FUNKE GmbH (Germany), one of the leading manufactures of qualified heat exchangers. Production of components for heat exchangers is carried out at the ESKMI factory. There is a gradual process of complete replacement of imported components with domestic ones. Assembling, testings, rework of exclusive and serial items for thermal and nuclear power plants, other industries and housing and communal services are performed in the workshop of OE.

The nomenclature of manufactured equipment includes type-sizes with weight from 100 kg to 40 tons. The presence of railway running, passing through the factory territory, makes the transportation affordable. Planned production capacities allow to assembly items of sizes up to 14 m and diameter up to 4 m.

100 kg - 40 000 kg

Besides of gasketed plate heat exchangers, the factory has technical possibilities to manufacture welded shell&plate HE and shell&tube HE out of carbon and austenitic steel, as well as lamel (tube&fin) HE.
To solve the problems of this level ESKMI factory has the following technologies in its production processes:

- Mechanical treatment by cutting of various metals and alloys
- Cold forming of sheet items by rolling
- Cutting (using guillotine shears and punches) and bending of sheet items
- Thermal cutting (laser, plasma, oxygen-propane) of various metals and alloys
- Thermal soldering
- Manual arc welding by covered electrode, manual argon-arc welding by non-consumable electrode, semi-automated welding in the medium of inert gases, mechanized welding in CO2 medium, orbital automated welding, automated welding of tubes in tube boards (austenitic and titanium metals and alloys, as well as non-ferrous metals)
- The use of thermal treatment on items
- Paint and varnish coverings of different types, including powder
- Application of zinc covering by dipping into a melt, galvanic zinc covering
- Operations at HEDELIUS milling machining center, sheet bending rolls with numerous program control.

Output of apparatus FP200 with overall dimension 3160×4730×1430 mm and total weight 14 tons in dry condition is mastered.

Particularly on operations:

- figured contour cutout on gas-plasma cutting with numerous program control out of sheet carbon steel of 240 mm thickness;
- mechanical treatment by workpieces cutting with numerous program control after gas-plasma cut, with separation on roughing and finishing operations;
- subsequent assembly for welding.

The works on the commissioning of fully-fledged workshop of heat exchange equipment is to be completed, all engineering services will be performed in the near future.

In 2010, leadership of ESKM decided to organize the site for assembling of plate heat exchangers using Russian and imported components in the workshop of OE. Production process is accompanied with continuous technical complementing with necessary equipment and fitting-out.

These efforts are directed on expanding of nomenclature of manufactured items for offering to Customers better heat exchange equipment, solving technical problems of different complexity level.

2.

Production opportunities

Each item in heat exchanger passes a step-by-step quality control, as well as products in general – testings on a certified technological installation of hydraulic testings.
Coloring of components and items in general is carried out at painting workshop with a careful surface preparation and final drying in special chambers.
Package of items is performed in special designed tare with meeting the requirements of protection against the external effects.

Thereby, a complete cycle of process is achieved from calculations and designing to receipt of finished products and shipment to Customer.

The main factory's purposes are the continuous and constant improving of the management methods of organization, mastering of new technologies, creating a friendly atmosphere and team spirit, increasing of competence level of personnel.
Plan of technical development is annually formed and implemented; from the purchase of necessary equipment to reconstruction of production workshops. The system of automated production preparation, from designing to storage of primary rolled metal products, is being implemented.

The main priority of ESKMI factory during manufacturing of items is a high quality and efficient solution of technical problems in optimal terms. Particular attention is paid to certification and attestation in supervisory bodies, carrying out the internal and external audits in order to improve the efficiency of work.

Quality management system is certified in accordance with the requirements of Standard ISO 9001:2008 and GOST ISO 9001-2011, management system in the field of occupational safety and labor protection – to the requirements of Standard OHSAS 18001:2007 and GOST 10.0230-2007, GOST P54934-2012/OHSAS 18001:2007. There are certified welding technologies as per groups of structures and steel grades NAKS and NIKIMT.

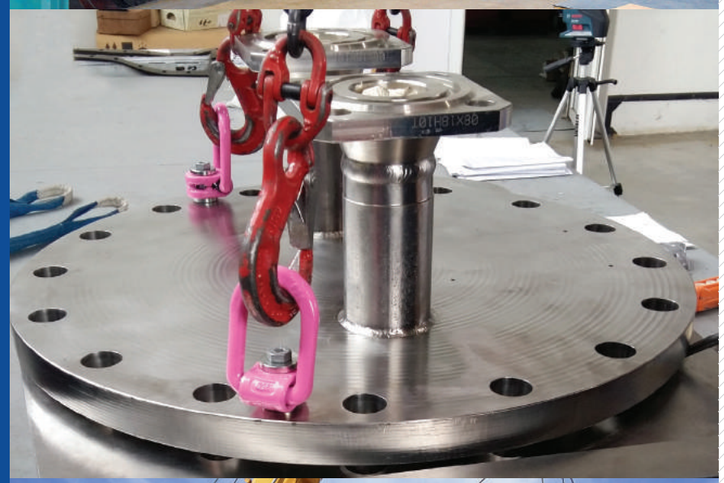

СЕРТИФИКАТ

СЕРТИФИКАТ

СЕРТИФИКАТ

СЕРТИФИКАТ

НАЦИОНАЛЬНОЕ АГЕНТСТВО КОНТРОЛЯ СВАРКИ

СВИДЕТЕЛЬСТВО

НАЦИОНАЛЬНОЕ АГЕНТСТВО КОНТРОЛЯ СВАРКИ

СВИДЕТЕЛЬСТВО

НАЦИОНАЛЬНОЕ АГЕНТСТВО КОНТРОЛЯ СВАРКИ

СВИДЕТЕЛЬСТВО

НАЦИОНАЛЬНОЕ АГЕНТСТВО КОНТРОЛЯ СВАРКИ

СВИДЕТЕЛЬСТВО

3.

Technologies, calculations and designing

The development of designing documentation for manufacturing of items and equipment in production subdivisions ESKM with the purpose of its application on energetic objects, including NPP, is carried out by specialized design-technological bureau (SDTB).

Over the past 5 years a rapid and noticeable increase of scope of work and expansion of nomenclature of manufactured items has occurred in ESKM. Output of heat exchange equipment of wide range is mastered: gasketed plate, welded shell&plate and shell&tube heat exchangers; lamel (tube&fin) heat exchangers (air-cooler and air-heater).
The purpose of SDTB: development and ensuring the supply of the whole range of items to the production.

The author's supervision over the production of developed by SDTB items and equipment is performed by specialists of bureau. With the growth of production capacities of enterprises and technology upgrading, designing documentation is being changed and improved.
For its preparation SDTB applies modern software. The specialists of bureau independently or together with the partners produce thermal hydraulic, strength and other types of calculations.

Manufacturing and installation of equipment and pipelines is impossible without welding and control. For these purposes, the Central laboratory of Welding and Technical control (CLW&TC) functions in ESKM.

The CLW&TC is certificated and accredited for works performance at dangerous industrial facilities. The Control Laboratory has a License and a Sanitary-Epidemiological Conclusion for use of sources of ionizing radiation for monitoring purposes.

Manufacturing of equipment is started with the development of DD. By this stage, close cooperation between designers and welding and control specialists begins. All design documentation passes the incoming inspection by the specialists of the CLW&TC.

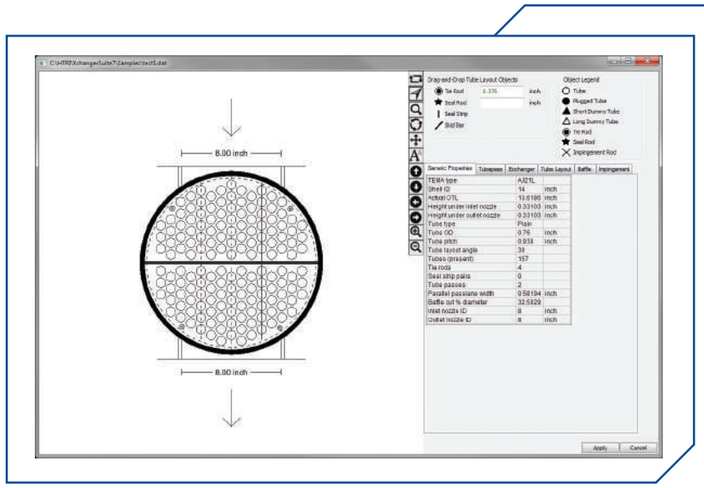

GSX

HTRI

PHE-Designer

Used calculated programs:

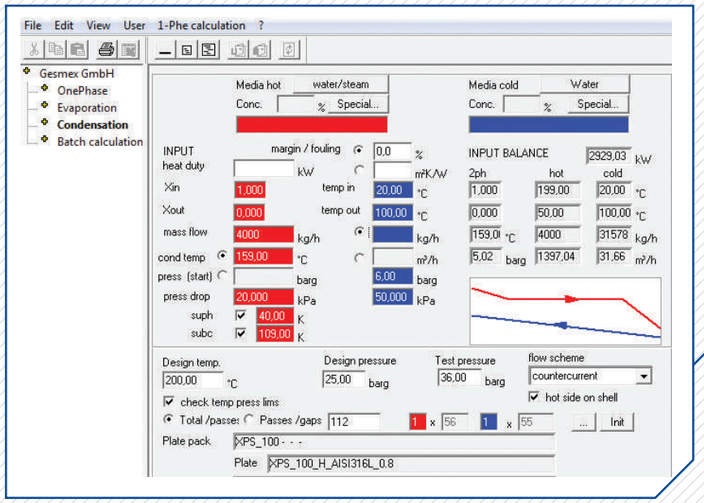

GSX-Calc program is the basis for the design of shell&plate heat exchangers.

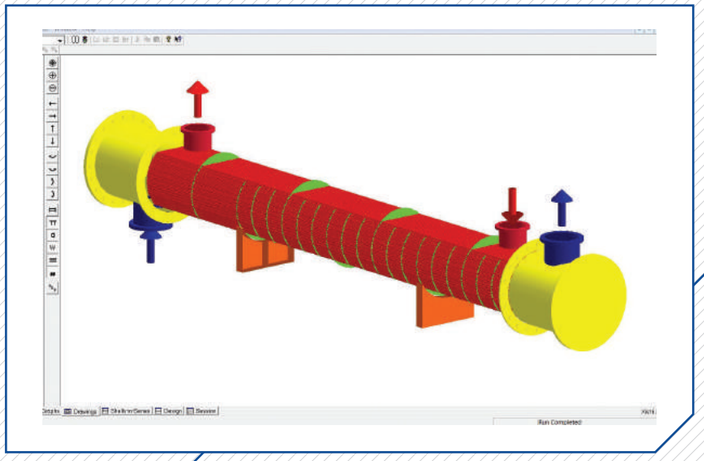

Software HTRI as the basis of all calculations of shell&tube heat exchangers.

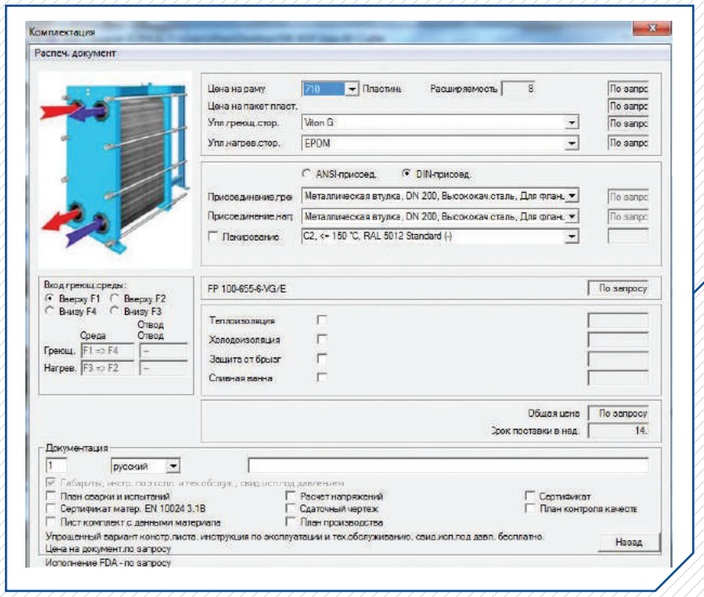

PHE-designer calculation program is used for selection of plate heat exchangers and is certified by AHRI.

3.

Technologies, calculations and designing

Basic and welding materials for the manufacturing of equipment are handed over to production only after confirmation of the certificate data and carrying out the necessary tests in the CLW&TC.
CWL&TC develops production-technological documentation (PTD) for the process of welding and control. PTD shall be approved in specialized organizations (JSC “NPO “TSNIITMASH”, JSC “NIKIMT-ATOMSTROY”, etc.), if this is provided by regulatory documentation.
To date, the welding technology of carbon steels, heat-resistant steels, corrosion-resistant steels, aluminum, and titanium has been certified in ESKM.
CWL&TC carries out the non-destructive testing of production welded joints, destructive control and laboratory testing at all stages of equipment manufacturing.

Technological database of design and production of ESKM heat exchange equipment is based on technical solutions and calculations programs of our German partners - FUNKE and GESMEX.

Many years of practical experience of close cooperation with FUNKE, offering to our customers and partners of professionally selected heat exchange equipment perfectly proved itself in many areas of the power industry, including nuclear power.

The key competence of GESMEX is production of compact welded shell&plate heat exchangers for industrial use. GESMEX’s investments in designing of equipment and production technologies – are also ESKM investments in the development of its own range of products. This work is directed on providing effective equipment with high degree of quality to our Customers, as well as compliance with standards and requirements of scientific technical documentation.

Of specific note is that technical conditions may be developed for particular objects with all Customers’ requirements.

TC 6934-048-47472841-2012

Technical conditions

The purpose of heat exchangers

Plate heat exchangers intended for heat exchange of fluid (gaseous) mediums in technological processes on units of NPP (for example – Leningradskaya NPP-2).
Heat exchangers have version, corresponding to safety class 3 (classification designation – 3H) as per NP-001-15 of group C as per NP-089-15 and safety class 4 as per NP-001-15.

Resistance requirements

Heat exchangers have 2 and 3 seismic category as per NP-031-01.

Covering requirements

Elements of heat exchangers (except fastening elements) manufactured out of carbon steel, have paint and varnish protective covering which ensures their operation at above mentioned technical conditions. Covering class - is not less than VI. Manufactured out of carbon steel fastening elements of heat exchanger have protective zinc or cadmium covering with thickness up to 12 mkm.

Heat exchange equipment of ESKM

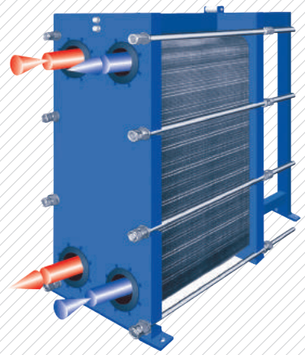

4.1
Gasketed PHE

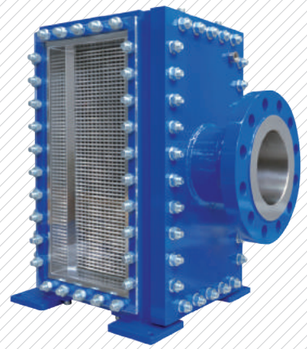

4.2
Welded PHE

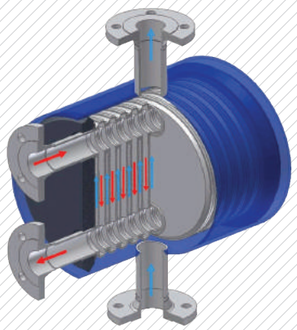

4.3
Shell&Plate HE

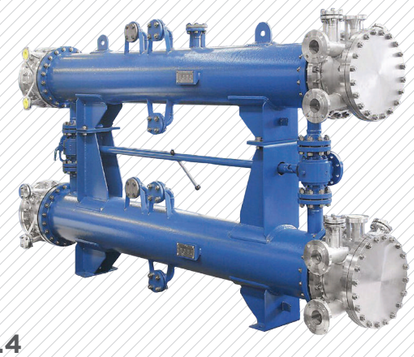

4.4
Shell&Tube HE

4.5
Lamel HE

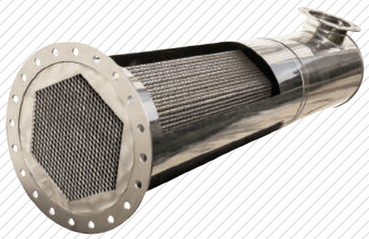

4.6
Heat exchanger intensification

5 reasons for co-operate with ESKM

Licenses for designing and manufacturing of equipment for nuclear installations

ФЕДЕРАЛЬНАЯ СЛУЖБА
ПО ЭКОЛОГИЧЕСКОМУ, ТЕХНОЛОГИЧЕСКОМУ И АТОМНОМУ НАДЗОРУ

ЛИЦЕНЗИЯ

Регистрационный номер ДО-11-101-2089 от "19" ноября 2014 г.

Лицензия выдана Обществу с ограниченной ответственностью "Корпорация Акционерной Компании «Электросевкомонтаж»" (ООО "Корпорация АК «ЭСКМ»").

Местонахождение лицензиата: г. Краснодар, ул. Трамвайная, д. 5.

Основной государственный регистрационный номер юридического лица (ОГРН) 1032307148629.

Идентификационный номер налогоплательщика 2312065504.

Лицензия дает право на конструирование оборудования для ядерных установок.

Объект, на котором или в отношении которого осуществляется деятельность: блоки атомных станций.

Основание для выдачи лицензии: заявление ООО "Корпорация АК «ЭСКМ»" (вх. № 1034/08 от 24 апреля 2014 г.), решение Донского межрегионального территориального управления по надзору за ядерной и радиационной безопасностью Федеральной службы по экологическому, технологическому и атомному надзору от 14 ноября 2014 г. № 2827А.

Срок действия лицензии до "19" ноября 2024 г.

Лицензия действует при соблюдении условий действия лицензии, являющихся ее неотъемлемой частью

Руководитель органа лицензирования В.А. Котков

М.П.

Серия АВ № 255803

ФЕДЕРАЛЬНАЯ СЛУЖБА
ПО ЭКОЛОГИЧЕСКОМУ, ТЕХНОЛОГИЧЕСКОМУ И АТОМНОМУ НАДЗОРУ

ЛИЦЕНЗИЯ

Регистрационный номер ДО-12-101-2140 от "07" апреля 2015 г.

Лицензия выдана ООО "Корпорация АК «ЭСКМ»"

Местонахождение лицензиата: г. Краснодар, Карасунский округ, ул. Демуш, д.11.

Основной государственный регистрационный номер юридического лица (ОГРН) 1032307162568.

Идентификационный номер налогоплательщика (ИНН) 2312075774.

Лицензия дает право на изготовление оборудования для ядерных установок.

Объект, на котором или в отношении которого осуществляется деятельность: блоки атомных станций.

Основание для выдачи лицензии: заявление от 24 октября 2014 г. № 907/17, решение Донского межрегионального территориального управления по надзору за ядерной и радиационной безопасностью Федеральной службы по экологическому, технологическому и атомному надзору от 06 апреля 2015 г. № 2937 А.

Срок действия лицензии до "07" апреля 2025 г.

Лицензия действует при соблюдении условий действия лицензии, являющихся ее неотъемлемой частью

Руководитель Донского МТУ по надзору за ЯРБ Ростехнадзора В.А. Котков

М.П.

Серия АВ № 255858

1

Reason No.1

Independent pricing policy due to the full-scale production of heat exchange equipment in Russia. Proven technologies, minimum of imported components, maximum of complex technical solutions.

2

Reason No.2

The quality of our products is our essence. This determines the choice of the strategy oriented to production, and not to the process of heat exchange equipment assembling. We control the quality from the incoming inspection of materials to the production of final products and testing.

3

Reason No.3

We are known and trusted by partners and customers in power energy construction. From high competence in electrical installation to high competence in the production of heat exchange equipment!

4

Reason No.4

A wide range of standard type sizes, custom-made - attention to every detail. Heat exchangers of ESKM are the optimal solution for almost all applications, which is especially important in technological processes of various sectors of the industry.

5

Reason No.5

Full compliance of heat exchange equipment with the state and industrial standards, requirements of the Technical Regulations of the Customs Union TR TS 010/2011 and TR TS 032/2013. “Rostekhnadzor” issued licenses for the design and manufacturing of equipment for nuclear installations.

4.

Heat exchange equipment of ESKM

Scope of validity of ESKM Heat exchangers

Gasketed plate heat exchangers

- From -30°C to 190°C
- From -0,1 to 2,5 MPa
- Up to 2400 m²

Welded plate heat exchangers

- From -40°C to 350°C
- From -0,1 до 4,0 MPa
- Up to 900 m²

Shell&plate heat exchangers

- From -200°C to 500°C
- From -0,1 to 15,0 MPa
- Up to 700 m²

Shell&tube heat exchangers

- From -100°C to 500°C
- From -0,1 to 40,0 MPa
- Up to 2000 m²

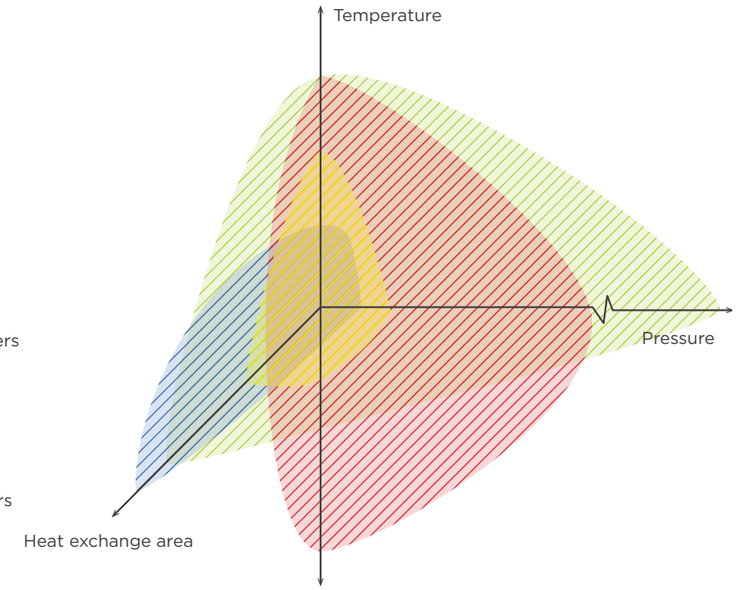

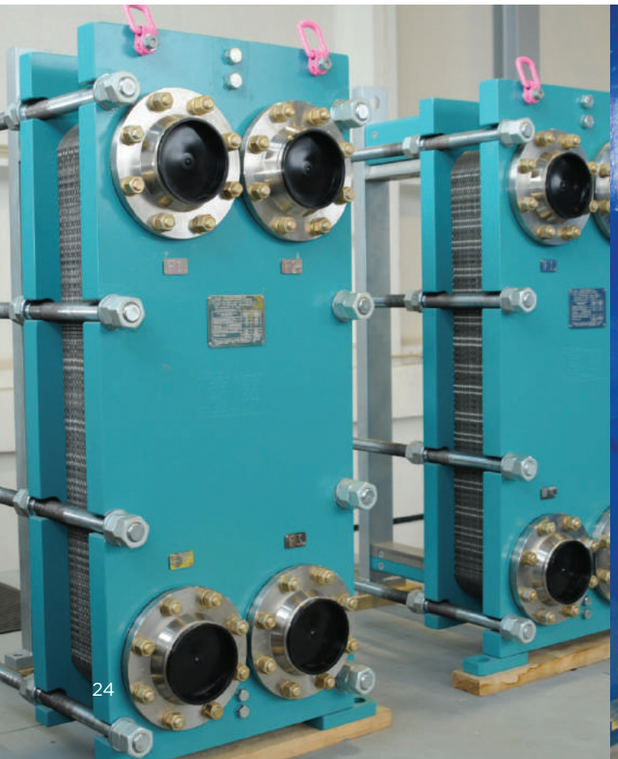

Field of application as per technology

Applicability in relation to the medium:

- Excellent
- Acceptable
- Not recommended

GPHE - gasketed plate HE

WPHE - welded plate HE

SPHE- welded shell&plate HE

STHE - shell&tube HE

Medium type / Technology	GPHE	WPHE	SPHE	STHE
Fluid-fluid	Excellent	Excellent	Excellent	Excellent
Gas-fluid	Acceptable	Excellent	Excellent	Excellent
Gas-gas	Not recommended	Excellent	Excellent	Excellent
1-component. Condensation	Acceptable	Excellent	Excellent	Excellent
1-component. Evaporating	Acceptable	Excellent	Excellent	Excellent
Partial condensation	Acceptable	Excellent	Excellent	Excellent
Partial evaporating	Acceptable	Excellent	Excellent	Excellent
Low and medium viscosity < 1000 cP	Excellent	Excellent	Excellent	Excellent
High viscosity < 5000 cP	Acceptable	Excellent	Excellent	Excellent
Moderately polluted	Acceptable	Acceptable	Excellent	Excellent
Strongly polluted	Not recommended	Not recommended	Acceptable	Excellent
Non-Newtonian	Not recommended	Not recommended	Not recommended	Excellent
Particles <5%	Acceptable	Acceptable	Acceptable	Excellent
Particles >5%	Not recommended	Acceptable	Acceptable	Excellent

Conditions of application:

- The best
- Medium
- The smallest

Type of conditions / Technology	GPHE	WPHE	SPHE	STHE
Heat transfer (effect.)	The best	The best	The best	The smallest
Intersection of temperatures	The best	The best	The best	The smallest
Thermal cycles	Medium	Medium	The best	Medium
Temperature difference > 150 °C	The smallest	The smallest	The best	Medium
Pressure difference > 3,5 MPa	The smallest	The smallest	The best	Medium

Ease of service:

- Easy
- Medium
- Hard

Service type / Technology	GPHE	WPHE	SPHE	STHE
Assembly/disassembly	Easy	Easy	Easy	Medium
Inspection control	Easy	Medium	Medium	Medium
Space for service	Easy	Easy	Easy	The smallest
Storage of attached spare parts	Easy	Easy	Easy	The smallest

4.1

Gasketed plate heat exchangers

Features of gasketed plate heat exchangers (PHE) of ESKM

- application of heat exchange plates of one of the world's leading manufactures FUNKE
- low investment and production expenses
- high efficient heat transfer (heat transfer coefficient on average in 3-5 times higher, than in HE with smooth tubes)
- asymmetric channels for more economic solutions
- PHE occupies up to 75% space less
- self-purification effect through high turbulent flow
- the possibility of auxiliary power increase due to the expansion of plate package
- high degree of reliability
- ease of disassembling /purification
- small operating weight/small volume of fluid

Structure of ESKM gasketed PHE and principle of operation

Structure of gasketed PHE includes the package of plates (with sealing gasket) placed between the base and pressing panels, forming this structure with two cavities, separated between each other by plates.

The package of grooved plates with passage hole – is the core of PHE. Plates rotate with respect to each other at an angle 180°. Thereby, there is a formation of channels through which mediums flow. The gasket which ensures the reliable leak-proofness of channels of medium flow, participating in heat transfer, is attached to each plate.
To achieve maximum heat transfer, warming up and heating mediums flow in the apparatus, as a rule, in a counterflow on a single-pass or multi-pass schemes. Pipelines connections are laid on the main panel, in case of multi-pass versions – on main and pressing panels.

Structure of heat exchangers – is complete gasketed, without disconnection of pipelines of external communications. There are a minimum number of places, which contribute to deposition and accumulation of contaminants as well as corrosion products and provide the possibility of mechanical purification of all elements. At that, sealing gaskets are suitable for repeated use during disassembly and assembly of heat exchanger.

Main technical characteristics

Power	1 KW - 30 MW
Working temperature	-30 °C - 190 °C
Working pressure	max. 25 bar
Max.surface	2400 m^2
Nominal connection diameter	20'' / 500 mm
Volume flow	5 m^3/h - 4500 m^3/h
Surface plate	0,04 m^2 - 3,0 m^2

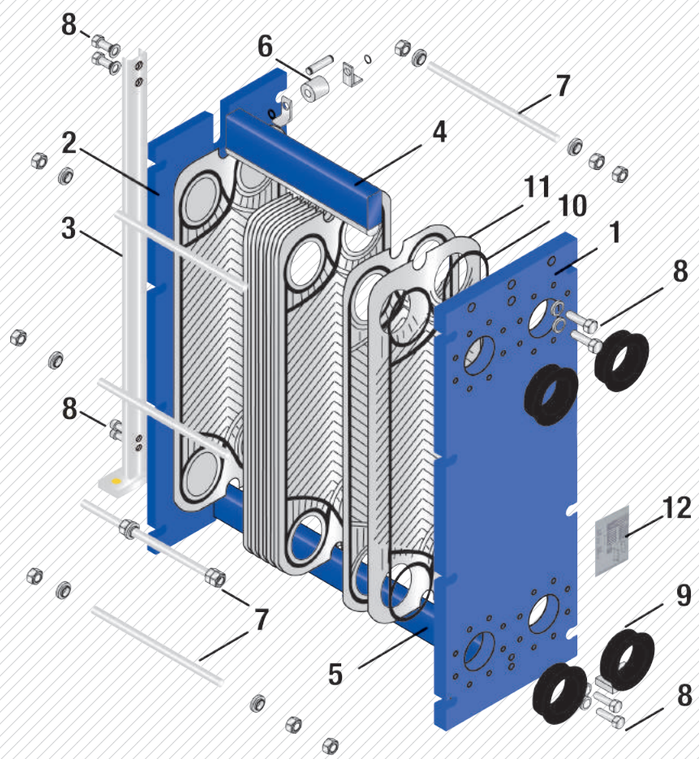

1. Fixed plate
2. Movable plate
3. Support column
4. Carrying bar
5. Lower plate guiding bar
6. Carrier roller
7. Tightening bolt and nuts
8. Fixing bolts
9. Rubber/metal liners
10. Gaskets
11. Heat transfer plates
12. Name plate

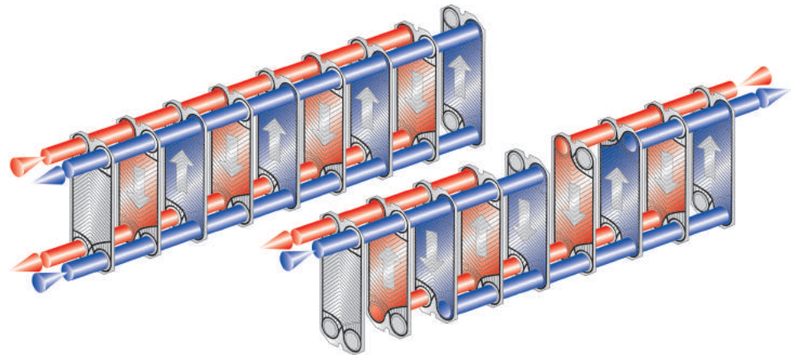

Connection layout

single-pass **two-pass** **three-pass**

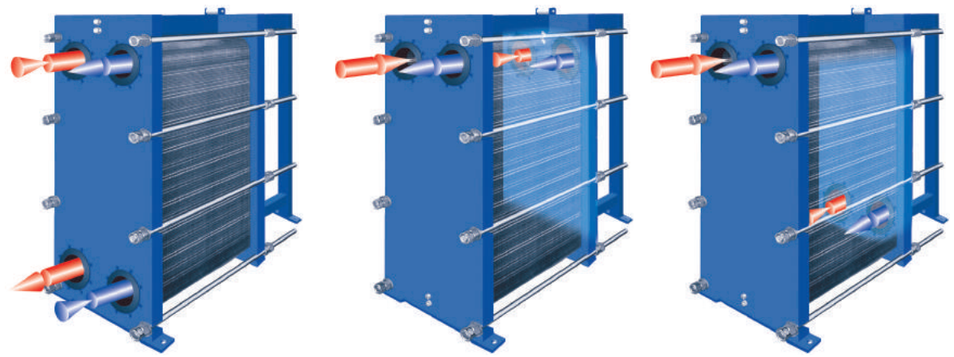

Gasketed plate heat exchangers

Materials of main elements of heat exchangers

Heat exchangers are equipped with counter flanges for welding to connecting pipelines and sealing gaskets for these flanges.

Equipment name	Material
Heat transfer plates	Sheet stainless steel 1.4404/AISI 316L
	Sheet titan, type ASTM B256 gr.1 (corrosive media)
Sealing gaskets	NBR (nitrile rubber): universal seals for aqueous and fatty media; EPDM (ethylene-propylene-rubber): for chemical compounds that do not contain fat and mineral oils; VITON (fluorine rubber): high resistance to organic solvents, sulfuric acid and vegetable oils at high temperatures
Plates (fixed and movable)	Steel as per GOST 5632
	Ст3сп5 GOST 380 or 16ГС GOST 19282
Notes:	
1. Materials of components of each particular heat exchanger and its connecting (response) flanges are given in the certificate of this heat exchanger.	
2. It is allowed to use other materials not listed in this table (including imported ones) that do not worsen the parameters of the finished product.	

Application:

In thermal communal and industrial energy, oil and gas sector, chemical industry and metallurgy.
For more details – please refer to Section No.5 of this catalogue: «Our Customers: list of supplies».

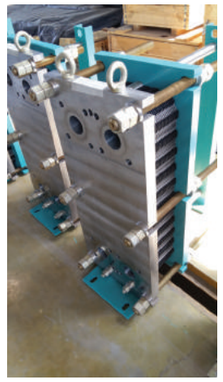

Full-scale testings of heat exchangers were held in I.I. Polzunov science and production association related to research and design of energy equipment, as well as an expert conclusion on compliance of declared characteristics was received.

Product range of gasketed PHE of ESKM

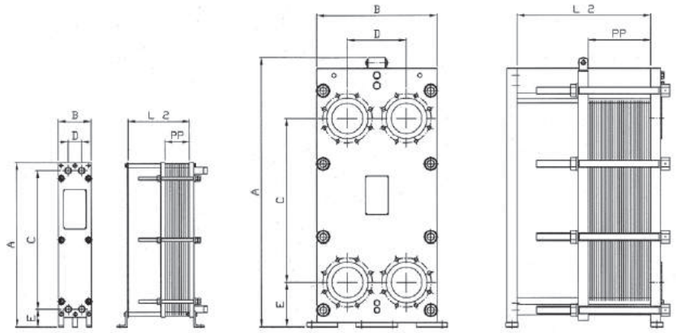

Type	Overall dimensions, mm							Max. number of plates	Surface/ plate, m²	Max. surface, m²	Connections
	A	B	C	D	E	PP	L2				
FP 05	470	185	381	70	45	Pcs. x 2,7	250-1000	150	0,04	6	1″
FP 09	765	185	676	70	45	Pcs. x 2,7	250-1000	150	0,08	12	1″
FP 10	733	310	494	126	128	Pcs. x 2,9	250-1000	200	0,1	20	2″
FP 16	933	310	694	126	128	Pcs. x 2,9	250-1000	200	0,16	30	2″
FP 22	1182	310	894	125	128	Pcs. x 2,9	250-1000	200	0,21	45	2″
FP 19	1080	440	650	202	200	Pcs. x 3,1	500-2500	500	0,19	100	DN80
FP 206	1160	480	719	225	204	Pcs. x 3,1	500-2500	500	0,21	105	DN100
FP 31	1332	480	894	225	204	Pcs. x 3,1	500-3000	500	0,3	150	DN100
FP 40	1579	480	1141	225	204	Pcs. x 3,1	500-3000	500	0,4	200	DN100
FP 50	1826	480	1388	225	204	Pcs. x 3,1	500-3000	500	0,5	250	DN100
FP 71	2320	480	1882	225	204	Pcs. x 3,1	500-3000	500	0,7	350	DN100
FP 41	1470	620	941	290	225	Pcs. x 3,5	500-4000	700	0,4	280	DN150
FP 60	1835	620	1306	290	225	Pcs. x 3,5	500-4000	700	0,6	420	DN150
FP 80	2200	620	1671	290	225	Pcs. x 3,5	500-4000	700	0,8	560	DN150
FP 42	1470	620	941	290	225	Pcs. x 3,1	500-4000	750	0,4	315	DN150
FP 62	1835	620	1306	290	225	Pcs. x 3,1	500-4000	750	0,6	450	DN150
FP 82	2200	620	1671	290	225	Pcs. x 3,1	500-4000	750	0,8	600	DN150
FP 112	2687	620	2157	290	225	Pcs. x 3,1	500-4000	750	1,15	840	DN150
FP 405	1380	760	770	395	285	Pcs. x 3,1	500-4000	700	0,41	300	DN200
FP 70	1740	760	1130	395	285	Pcs. x 3,1	500-4000	700	0,7	455	DN200
FP 100	2100	760	1490	395	285	Pcs. x 3,1	500-4000	700	1	700	DN200
FP 130	2460	760	1850	395	285	Pcs. x 3,1	500-4000	700	1,3	910	DN200
FP 81	1930	980	1100	480	365	Pcs. x 3,8	1780-5280	800	0,8	640	DN300
FP 120	2320	980	1490	480	365	Pcs. x 3,8	1780-5280	800	1,2	960	DN300
FP 160	2710	980	1879	480	365	Pcs. x 3,8	1780-5280	800	1,6	1280	DN300
FP 190	3100	980	2267	480	365	Pcs. x 3,8	1780-5280	800	1,9	1520	DN300
FP 150	2500	1370	1466	672	480	Pcs. x 4,1	1980-5980	800	1,5	1200	DN500
FP 200	2855	1370	1822	672	480	Pcs. x 4,1	1980-5980	800	2	1600	DN500
FP 250	3211	1370	2178	672	480	Pcs. x 4,1	1980-5980	800	2,5	2000	DN500
FP 300	3567	1370	2534	672	480	Pcs. x 4,1	1980-5980	800	3	2400	DN500

Welded plate heat exchangers

Features of welded plate heat exchangers – FunkeBlock

- Ungraded product series from the III quarter, 2015
- Optimized profile
- Module structure
- Absence of stagnant zones between plates
- Fully automatic welding for consistently high quality
- Bearing root seam of the plate
- Increased strength of weld seam in the zone of temperature stress
- Absence of risk of corrosion formation at the critical points of «internal surface of weld seam» and «external surface of weld seam»

Structure and principle of FunkeBlock operating

FunkeBlock is a welded plate heat exchanger with removable plates, the core of which is a welded package of plates.

The mediums flow through the package of plates as per counterflow principle. At that, heat transfer carries out from warmed up medium to heated one. Due to the vortex thin-layer flow this process is carried out more effectively than in heat exchangers of other structures.

It is possible to select the heat exchanger in accordance with flow modes and characteristics of various mediums and applications during the selection of profile of welded plate packages.

Application:

- Energetics (coolers, capacitors, recuperation)
- Oil and gas (gas dehydration, gas purification, primary distillation)
- Petrochemicals (ethylene / glycols, phenols, biphenols)
- Chemistry (chlorine lye, caustic soda, urea, ammonia, ammonium nitrate, nitric acid)

Supplies are carried out together with our German partner FUNKE

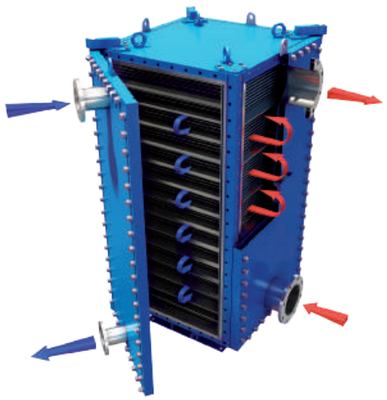

Main technical characteristics

Operating temperature	-40 °C - 350 °C
Working pressure	-0,1 MPa - 4,0 MPa
Max.surface	900 m²

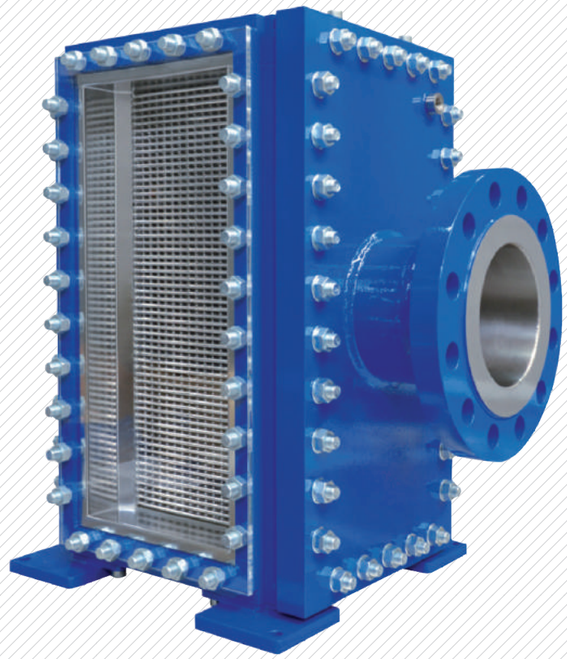

Type	Surface, м²	Working pressure, bar	Connection diameter, max
FPB 006	1 - 14	40	DN 150
FPB 014	8 - 63	40	DN 200
FPB 025	27 - 145	40	DN 250
FPB 056	61 - 290	40	DN 400
FPB 113	123 - 580	32	DN 800
FPB 188	306 - 967	32	DN 800

* FPB 006 ready for supplies
FPB 014 ready for supplies
FPB 025 ready for supplies
FPB 056 готовы к поставкам
FPB 113 supplies in 2017/2018
FPB 188 supplies in 2017/2018

Unique system of landing fastener Column of end boards

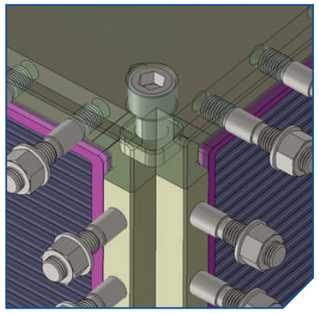

Increase of the overall rigidity of the body

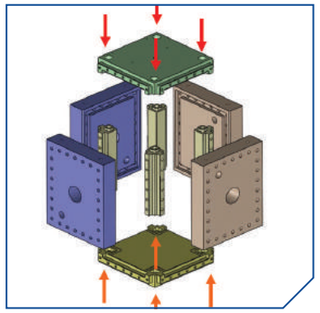

Prevention of possible bias

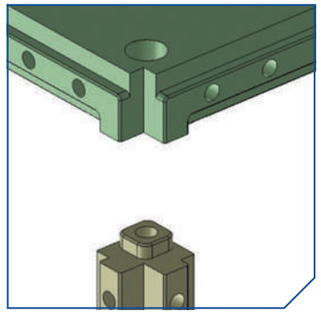

Square landing profile of covers for optimal fixation

Welded shell & plate heat exchangers

Features of welded shell & plate heat exchangers (SPHE) of ESKM

- decreased dimensions at similar performance (in comparison with shell&tube heat exchangers)
- thermal and hydraulic stresses in round plates are distributed more equal than in rectangular ones, that reduces the risk of cracking
- low weight
- absence of sealing between heat exchange plates
- design pressure up to 150 bar (overpressure)
- high resistance to cyclic loads
- high coefficient of heat transfer
- dismantling of the structure
- the use of laser welding during manufacturing of plates packages
- welded seams with large contact surface, simultaneously the heat supplied during welding is reduced
- a smaller volume of weld pool prevents the formation of shrinkage holes and pores during crystallization
- packages of plates with high leak-proofness and low tendency to corrosion
- along with high rate of heat exchange the turbulent flow leads to more expressed effect of self-purification and contributes to minimization of temperature
- on the basis of equal distribution of the pressure across the flow mediums passing through the heat exchanger are efficiently disturbed along the cross-section and, accordingly, on the surface of the whole plat

Full-scale testings of heat exchangers were held in I.I. Polzunov science and production association related to research and design of energy equipment, as well as an expert conclusion on compliance of declared characteristics was received.

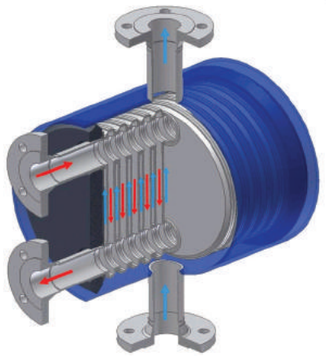

Main technical characteristics

Maximum operating parameters mostly depends on dimensions, used materials and thicknesses.

Operating temperature	-200 °C - 500 °C
Working pressure	-0,1 MPa - 15 MPa
Max.surface	700 m²
Viscosity limits	Max. 8,0 Pa*s

Application

ESKM SPHE is used in the following industries:

- energetics
- chemical industry
- petrochemical industry
- transportation of oil and gas
- pharmaceutical industry
- production of liquefied gas
- bioenergetics
- shipbuilding
- pulp and paper industry
- metallurgy

Reduced dimensions with similar performance

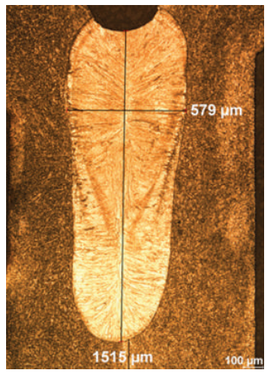

Laser welding, joint section up to 3,5 x plate thickness

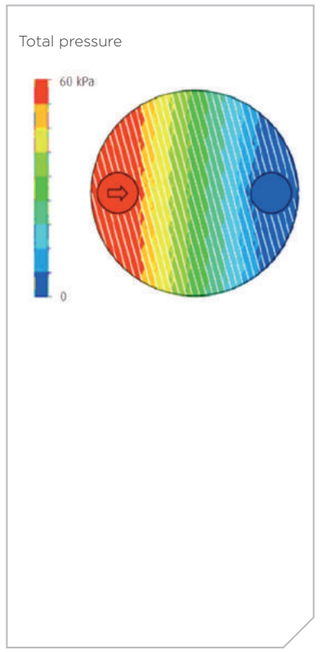

Pressure distribution

Welded shell & plate heat exchangers

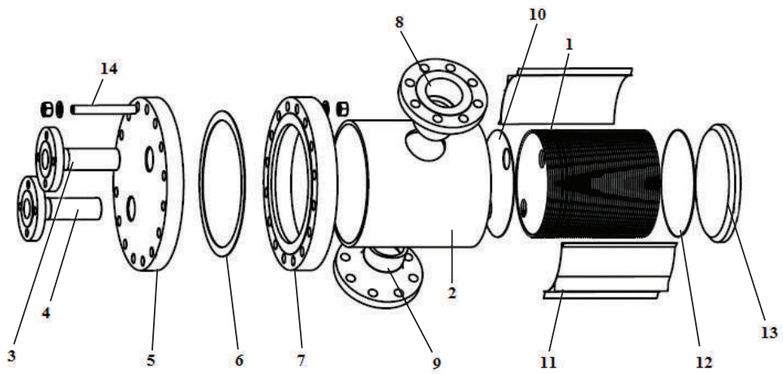

ESKM SPHE structure and principle of operating

Heat exchangers plates form parallel channels through which hot and cold mediums alternately pass. There is a heat transfer from hot to cold medium through the walls formed by plates of channels.

Warmed up and heated mediums pass through the plates cavity or shell cavity. Vessels can be all-welded or opened. Opened vessels on one side allow to perform inspection from the shell side. Opened on the both sides two packages are intended for large capacities or for several circuits.

Shell&plate heat exchangers of ESKM can be installed horizontally or vertically in accordance with the requirements of technology or for optimization of the geometry for connections.

1. Package of plates
2. Shell
3. Input from the plate-side
4. Output from the plate-side
5. Flange plug
6. Gasket
7. Shell flange
8. Input from the shell-side
9. Output from the shell-side
10. Jointing disk
11. Flow guide
12. End disk
13. End plate
14. Bolt

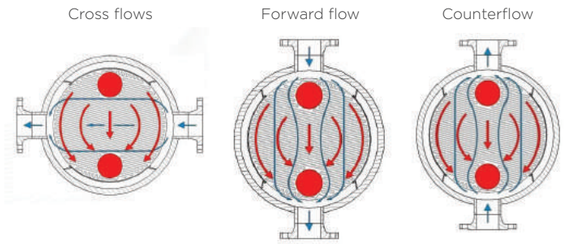

Materials of main elements of heat exchangers

Working medium determines the selection of materials. For general use there is a big choice of various materials. New possibilities of application always expand the options of heat exchangers versions.

Materials of plates
Austenitic steels, for example: 1.404/AISI 316L 1.4547/SMO 254
Nickel alloy, for example: 2.4819/AISI N02201
Nickel-based alloys, for example: 2.4602/Alloy C-22 2.4819/Alloy C-276
Titanium steels, for example: 3.7025/AISI B265 Gr1

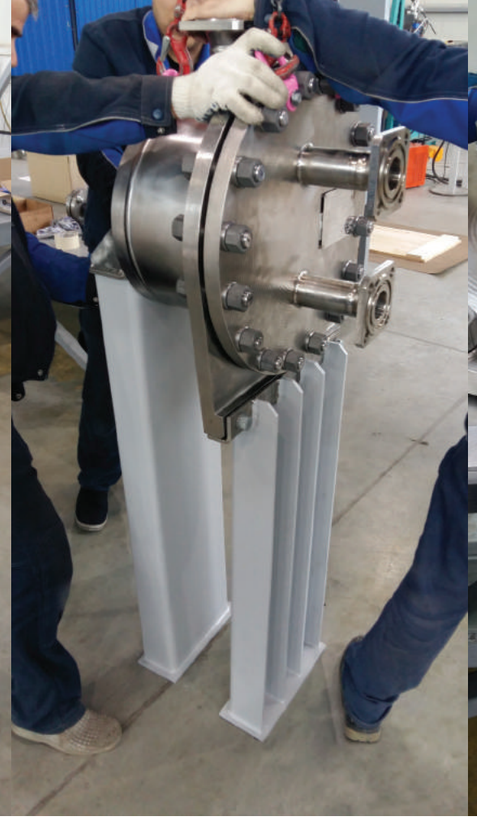

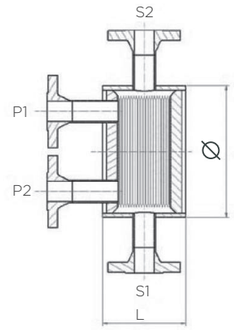

Product range of ESKM SPHE

Type	Connection diameter		Overall dimensions, mm		Surface, m²
	S1, S2	P1, P2	Ø	L	
XPS 50	DN 20-100	DN 50	360	From 150 (depending on the plate number & pressure stage) up to 2400	1,5...30
XPS 100	DN 25-250	DN 100	610		max. 100
XPS 150	DN 50-350	DN 150	890		max. 320
XPS 200	DN 50-450	DN 200	1100		max. 500
XPS 300	DN 50-600	DN 300	1400		max. 700

4.4

Shell & tube heat exchangers

Features of shell&tube heat exchangers (STHE) of ESKM:

- complex solution of Customer's tasks due to recommended international standard "TEMA" and wide range of models as per technical conditions (TC) VNIINEFTEMASH
- optimum design version with application in calculations of modern software (particular, HTRI)
- reliable heat transfer calculated also for critical parameters and aggressive mediums
- reliability of operation at high working pressure values and temperatures
- reduced tendency to contamination formation due to competent optimization of medium flow process
- increased safety during operation with risk minimization of working mediums mixing
- rugged, reliable and high-quality structures
- low investment and operating costs

ESKM STHE structure and principle of operating

Shell&tube heat exchanger – is an apparatus which operates under pressure and consists of two separate cavities (tube and shell sides). Divided by the wall of internal tubes, two flows exchange between themselves with thermal energy without mutual mixing of working mediums, if there is a difference in temperatures.
The direction of medium flow in the shell side is controlled by guide baffles for optimal cross-section of the flow. The shape of baffles and the distance between them are selected in accordance with the specified characteristics of STHE, with the purpose of achieving the maximum possible coefficient of heat transfer.
Depending on values of flow velocity and accessible drops of pressure the heat exchanger can be performed in single- or multi-pass modifications with straight U-tubes. If the radiation losses are excluded, the quantity of the delivered heat is equal to the rejected heat.

Main technical characteristics

Power	1 KW - 30 MW
Operating temperature	-100 °C - +500 °C
Working pressure	max. 40 MPa
Max.surface	2000 m^2
Shell diameter	60 mm - 3000 mm
Outer diameter	up to 3500 mm
Length	up to 10 000 mm
Dn of connecting pipe	up to 600 mm

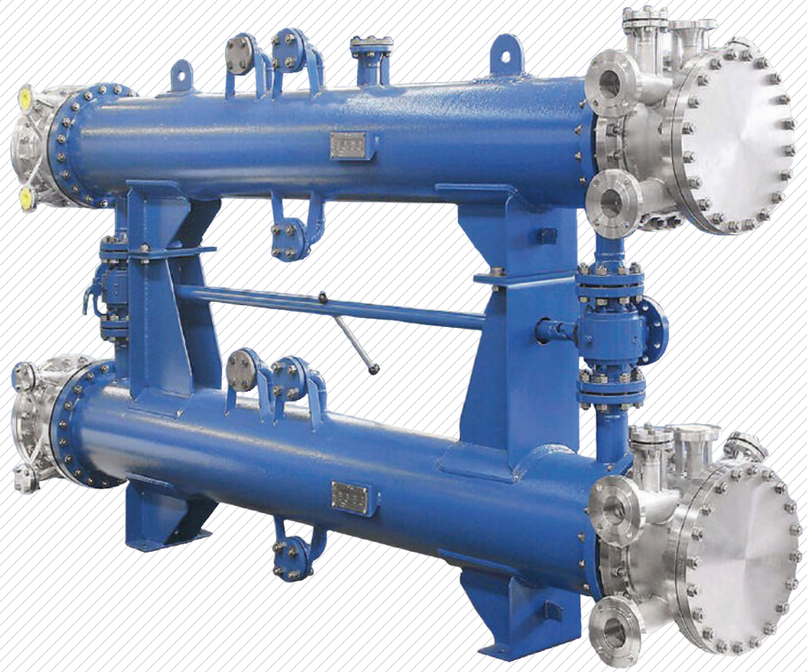

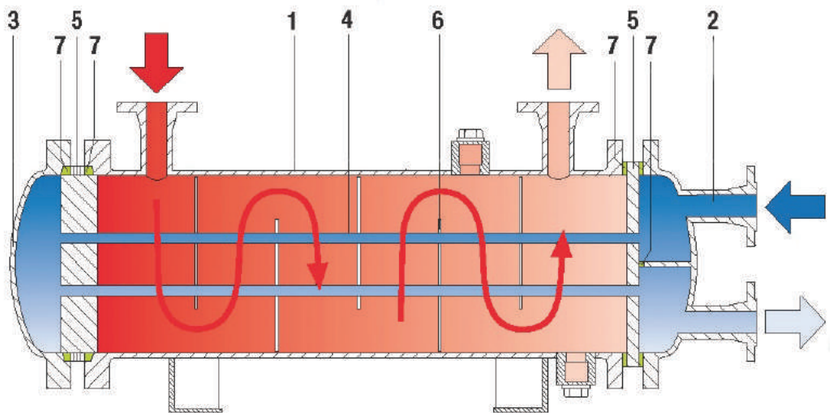

1. Shell
2. Distribution chamber
3. Guide chamber
4. Internal tubes
5. Tubesheets
6. Baffles
7. Gaskets

Shell & tube heat exchangers

STHE as per performance standard “TEMA”

One of the most spread international standards which is widely used during calculation of heat exchange apparatus – is American “Standards of the Tubular Exchanger Manufacture’s Association”, abbreviated to “TEMA”.

Initially, the constructive standards kit of “TEMA” was developed as addition of “Code of boiler and pressure vessel calculations” – ASME (American Society of Mechanical Engineers) and most of them can be used as addition to other norms of pressure vessel calculations.

Norms of standard “TEMA” are applied primarily during calculations of shell&tube heat exchangers, including the following limitations: shell diameter shall not exceed 1524 mm, pressure – 21Mpa, the product of shell diameter on pressure — 10 500 mm – Mpa. Besides of the thermal-hydraulic and strength compliance this standard provides the constructive versions of heat exchangers for different scope of application: from petrochemical to food industries, pharmaceuticals and the sphere of communal heat supply.

There are three classes of requirements to strength calculations in “TEMA” norms:
class R — strict requirements due to the use of heat exchangers in which, as a heat carrier, oil fractions are used and related with them technological processes;
class C — moderate requirements, related with application in communal sphere;
class B – absence of strict requirements due to the application of heat exchangers in spheres not subjected to supervision.

“TEMA” offers a simple three-letter notation system which completely covers almost all shell&tube heat exchangers depending on types of guide and distribution chambers, shell configuration; this system is specified in the sketch table.

Standard “TEMA” is confirmed with years of experience of leading international institutions studying the processes of heat exchange and optimizing structures of developed and applied heat exchange apparatuses. This standard is successfully applied in many countries, including Russia, and it is a multifunctional and convenient tool in operating of profile constructive, designing and production companies.

STHE materials selection as per standard “TEMA”

In accordance with the requirements of rules and norms and according to the properties of working mediums, carbon and stainless steels as well as alloys of non-ferrous metals are used. It is possible to use special material of galvanic and other coverings.

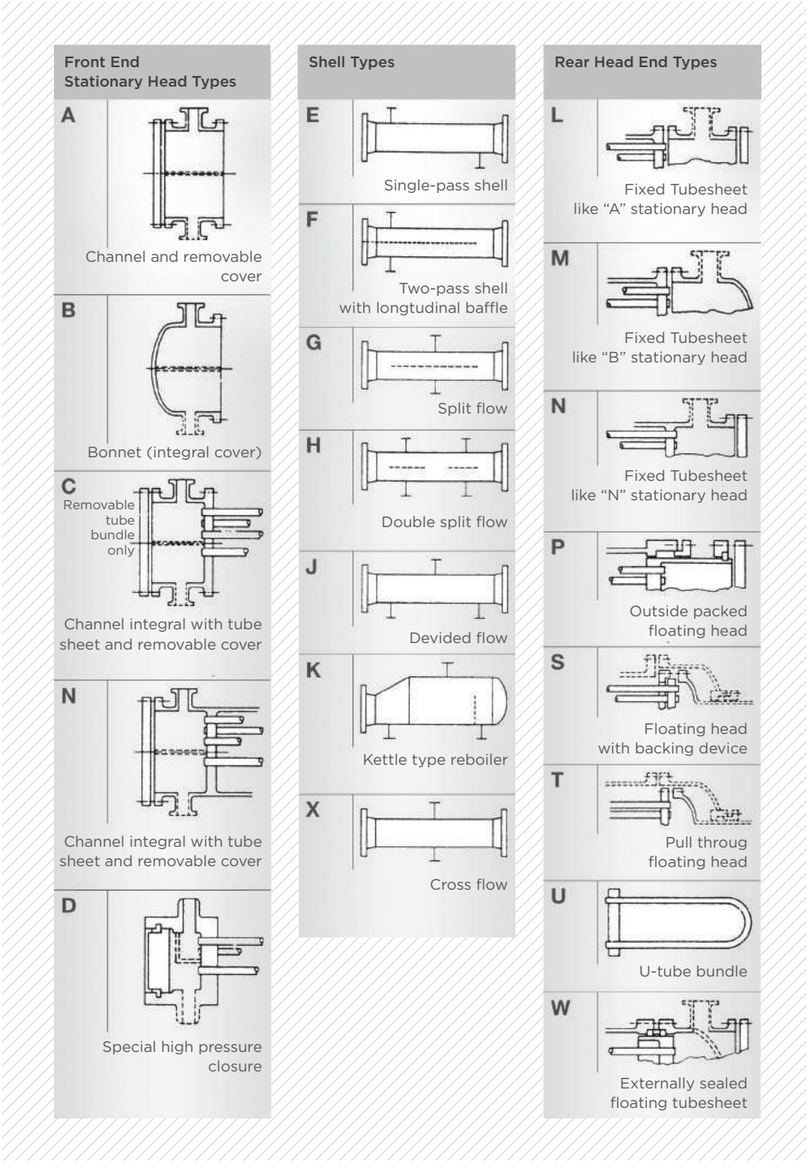

Shell & tube heat exchangers

Universal heat exchangers with removable tube bundle

Series UH (for example, TEMA type BEW, AEW)

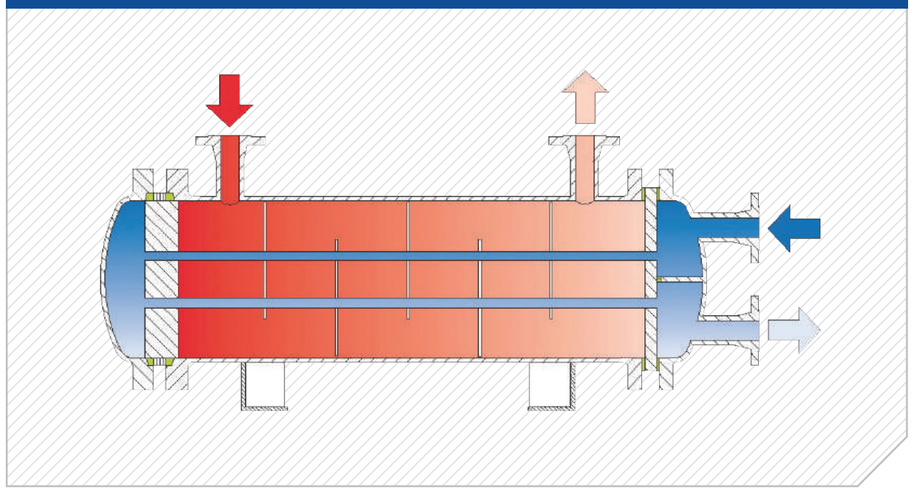

Technical characteristics

Shell&tube heat exchange apparatus is used at high temperatures. Strengthen body structure, good possibilities in accordance with technical inspection and maintenance due to movable tubing (sliding and wide-channel).
In the case of a leak caused by the damage of sealing, mediums are not mixed and shall be led out.

This type is possible in single-/double- or four-pass version.

Field of application

For fluid heat exchange, oil cooling in hydraulic systems, transmission devices and motors, shipbuilding and other technological processes. It is also used for cooling of gases with water.

Universal heat exchangers with removable tube bundle

Series UH 100 (for example, TEMA types BEP, AEP)

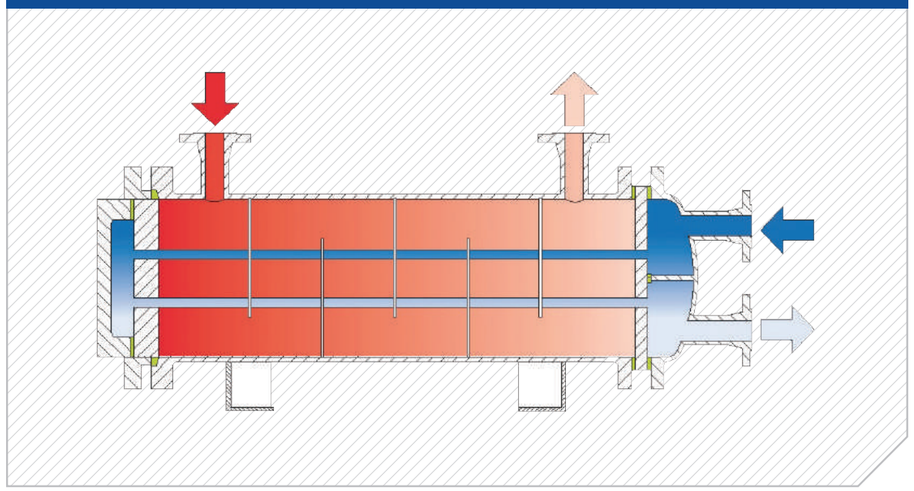

Technical characteristics

Mobile tubing with O-ring sealing allows to achieve greater temperature differences and at the same time compensate the expansions which are occurred between shell and internal tubes.
In the case of a leak caused by the damage of sealing, mediums are not mixed and shall be led out.

This type is possible in single-/double- or four-pass version.

Field of application

In the form of intermediate or final cooler. According to the design conditions these heat exchangers are suitable for operating with fluid operating mediums as well as gas-cooler with or without partial condensation, at that critical mediums shall be supplied into tubes.

Shell & tube heat exchangers

Universal heat exchangers with removable tube bundle

Series UH 200 (for example, TEMA types BEM, AEM, NEM)

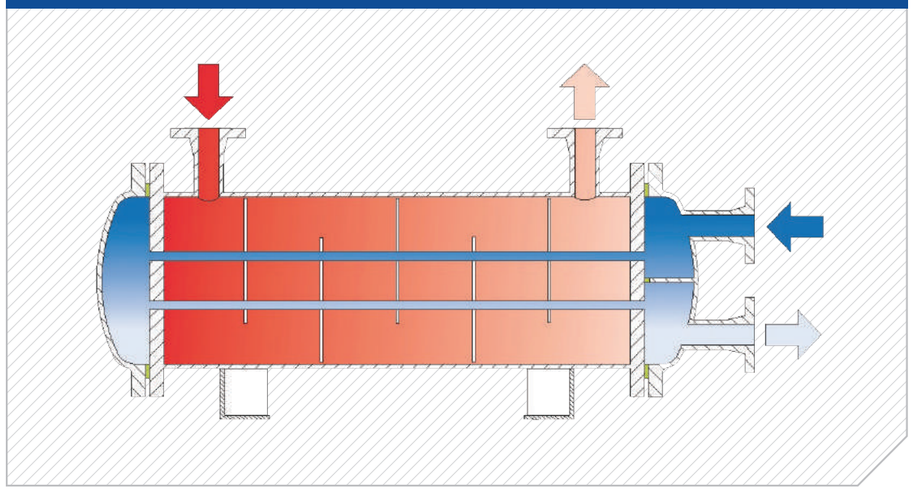

Technical characteristics

Fixed tubing with or without compensators in shell. It is ensured the high heat exchange surface in the shell.
Depending on values of stresses at high thermal expansions, the shell is equipped with axial compensator.

Maximum working pressure is up to 25 bar.

Field of application

Cooling and heating of various types of mediums, both fluid and gaseous. Heat exchangers are applied in different industries. HE UH 200 belongs to the universal apparatus. Their structure allows to be used for cooling and heating of fluids, gases, steams, as well as for condensation and operating in the vacuum mode.

Specially designed system of medium supply allows operation at increased working pressure, and polluted operating mediums shall be supplied into tubes.

Universal heat exchangers with removable U-tube bundle

Series UH 300 (for example, TEMA types BEU, AEU, BFU, AFU, BXU, AXU)

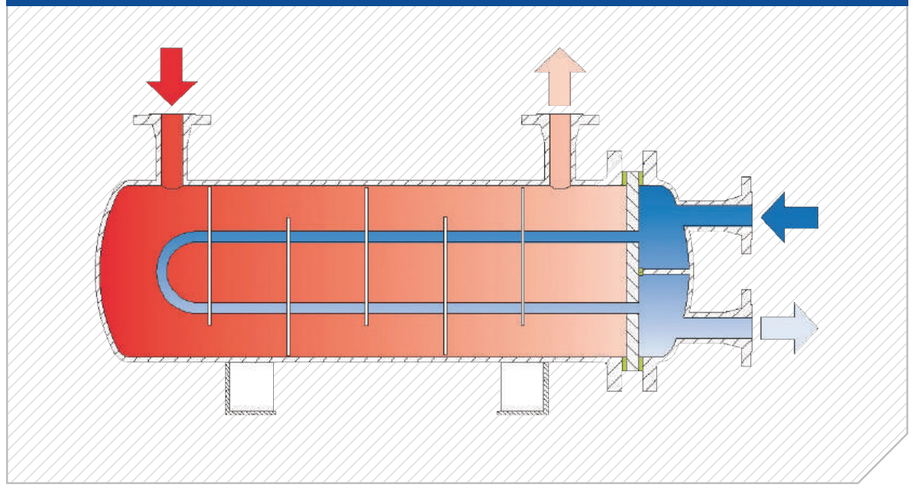

Technical characteristics

The structure with U-tube movable system, with compensator in order to compensate the increase of the length occurred between the internal tubes and the heat exchanger shell. The internal U-tubes, fastened exclusively on fixed tubesheet, allow operation at extremely high temperature and pressure, without the occurrence of thermal stresses and, therefore, without damages of tubes and tubesheet connections.

Various modifications of distributed chamber with two- or multi-pass (through the tube space) version are possible.

Field of application

Cooling and heating in different processes. It is used in the process where a strong temperature difference is possible. The structure of heat exchangers UH 300 refers to the universal apparatuses.

These heat exchangers are applied for partial of full condensation of gases and steam as well as a fluid coolers and heaters.
In general, the selection of medium supply scheme is free. However, it is preferably to supply clean working medium into tubes, because the mechanical purification of U-tubes is possible only in a limited area.

Additional constructive possibilities, such as two-pass (on the shell side) version and version as a suction cooler for installation in reservoirs, expand the field of application of this heat exchanger type.

4.4

Shell & tube heat exchangers

Universal heat exchangers with floating head and removable tube

Series UH 400 (for example, TEMA types AET, BET)

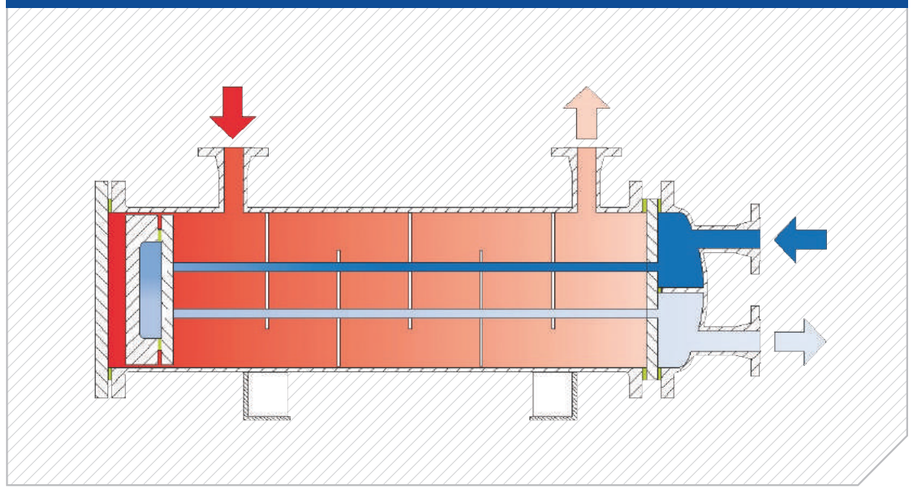

Technical characteristics

Movable tube system, with reverse chamber installed on mobile part of the shell; it can be disassembled without removing the chambers. Heat exchangers UH 400 are equipped with straight internal tubes and removable tube bundle, fixed tubesheet of which is hold between shell flange and flange of tube bundle with the help of two flat sealings and bolts.

This type of heat exchanger is possible in one-/-two and four-pass version.

Field of application

Cooling processes as a final and intermediate coolers of steam, gas, steam condensers, in the chemical industry.

Heat exchangers UH 400 are used mainly where in addition to the removable tube bundle and ease of purification, high-quality sealing is required at corresponding working mediums, pressure and temperature.

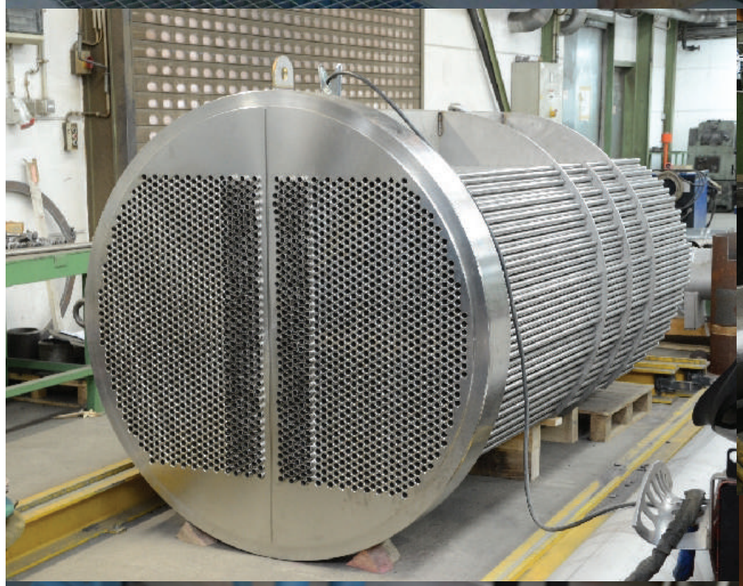

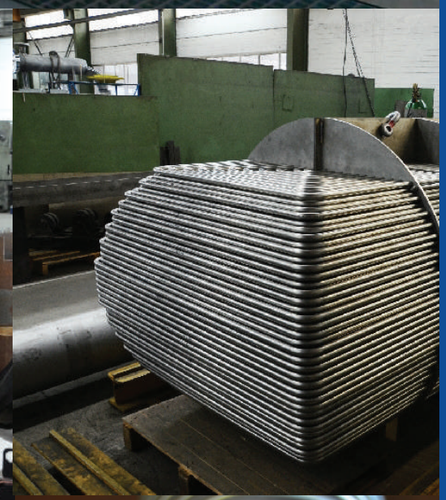

Shell & tube heat exchangers

STHE as per technical conditions VNIINEFTEMASH

TC 3612-**023**-00220302-01 Shell&tube heat exchange apparatus with floating head, shell&tube with U-tubes and tube bundle to them.
Technical conditions 3612-**023**-00220302-01 are spread on the following shell&tube heat exchange apparatuses:

The samples of legend of heat exchange apparatus during ordering

325 ТПВ-2,5-М1/25Д-3-К-2-Т

Vertical heat exchanger with floating head (ТПВ), with shell diameter 235 mm, on conditional pressure in tubes and shell 2,5 MPa, material version M1, with diaphragm heat exchange tubes (Д), diameter 25 mm, length 3 m, located at the vertex of squares (К), two-pass through the tube side, climatic version (Т), without details for thermal insulation fixing.

type	heat exchanger	«Т»
	cooler	«Х»
	condenser	«К»
version	with floating head	«П»
	with U-tubes	«У»
location	horizontal	«Г»
	vertical	«В»

Smooth (Г) heat exchange tubes are applied in the apparatuses. In technical justified cases it is allowed to use diaphragm (Д) heat exchange tubes with rolled ring grooves.
Apparatuses can be operated in the conditions of macroclimatic regions with temperate and tropical climate. Climatic version “У” and “Т”, item category 1 as per GOST 15150.
Apparatuses are intended for installation in geographical regions with seismic up to 7 points as per adopted in Russian Federation 12-point scale.
The possibility of operating in seismic regions of 7 and more points is defined by calculation of the seismicity as per SNiP II-7, taking into account the specific type-size.

TC 3612-**024**-00220302-02 Shell&tube heat exchange apparatus with fixed tubesheets and shell&tube with temperature compensator on shell.
Technical conditions 3612-**024**-00220302-02 are spread on the following shell&tube heat exchange apparatuses:

The samples of legend of heat exchange apparatus during ordering

1000 ТНГ-2,5-М1/20Г-6-4-У-И

Horizontal heat exchanger with flexible tubesheets (ТНГ), with shell diameter 1000 mm, on conditional pressure in tubes and shell 2,5 MPa, material version M1, with smooth heat exchange tubes (Г), diameter 20 mm, length 6 m, four-pass through the tube side, climatic version (У), with details for thermal insulation fixing.

type	heat exchanger	«Т»
	cooler	«Х»
	condenser	«К»
	evaporator	«И»
version	with fixed tubesheets	«Н»
	with temperature compensator on the shell	«К»
location	horizontal	«Г»
	vertical	«В»

Field of application

Apparatuses are intended for heat transfer of fluid and gas mediums in the technological processes of chemical, petrochemical, oil refining, petroleum, gas and other industries and are manufactured for domestic and foreign supplies.

Shell & tube heat exchangers

Shell&tube heat exchangers of special use

Coolers of exhaust gases Series ООГ 200

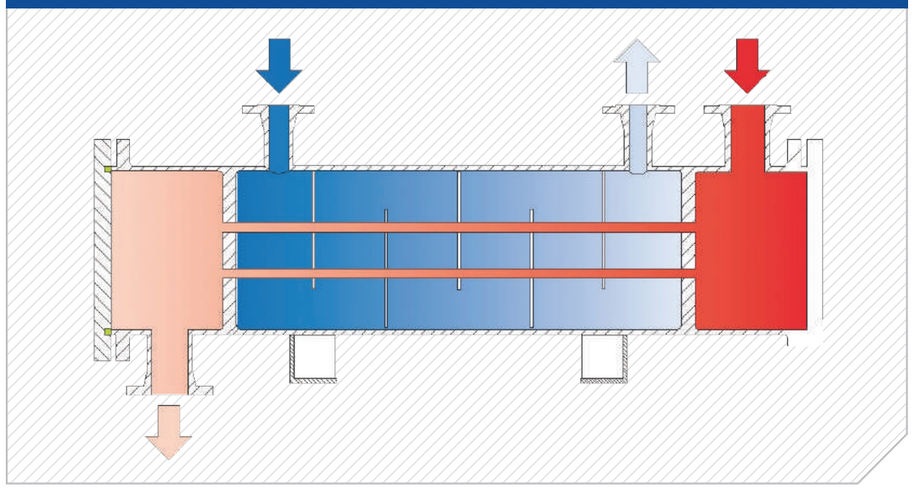

Technical characteristics

Heat exchangers ООГ 200 are a special structure of coolers of exhaust gases. The medium is supplied into tubes, at that only one-pass (through the tube side) modification is available. Heat exchangers are equipped with straight internal tubes and non-removable tube bundle; the shell is hermetically welded with tubesheets. According to design reasons, heat exchangers ООГ 200 are equipped with tubes bundles with maximum parameters. Depending on the norms and combinations of materials, as well as maximum allowable working parameters (P/T) tubes and tubesheets connection are achieved by welding. After welding the internal tubes are subjected to the subsequent beading that prevents the occurrence of crevice corrosion. Both distributed chambers of the exhaust gas space are equipped with the access hatches which simplify the purification of internal tubes without demounting of tubing of exhaust gas.

Field of application

Heat exchangers ООГ 200 are designed special for the heat regeneration of exhaust gases of internal combustion stationary motors of block CHPP. Depending on the applied type of fuel (diesel, natural gas, biogas, rapeseed or vegetable oil) and in accordance with the Customer's requirements the selection of materials and dimension of the tubes is performed.

Materials selection

The stainless steels are used in accordance with the requirements of rules and norms for manufacturing of internal tubes, tubesheets and baffles, as well as chambers of exhaust gas outlet. The chamber of exhaust gas outlet and shell are made out of carbon steel. It is possible to use other combinations of alloys or special materials.

Shell&tube heat exchangers of special use

Sampling heat exchanger Series ТОП

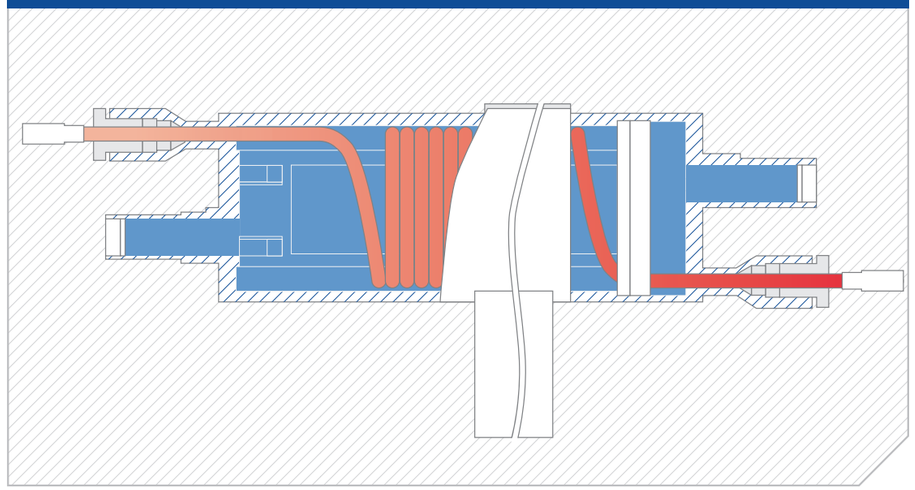

Technical characteristics

Sampling heat exchangers are performed in the vertical version, single-body and single-pass through the tube and shell sides, without flange connector. Heat exchangers consist of cylindrical body, inlet and outlet branch pipes, support. Heat exchanger surface is made out of tube in the form of screw cylindrical spiral. Sampling heat exchangers have the following main components: body, support, displacer, coil. It is made out of corrosion-resistant steel of austenitic class, support material – carbon steel.

Field of application

Sampling heat exchangers are the part of the level control system in the steam generator and humidity in steam conduit of NPP. They are intended for temperature reducing of the analyzed medium before chemical control.

Lamel (tube & fin) heat exchangers
air coolers and air heaters

Features of lamel heat exchangers of ESKM

- innovative technological equipment, universality of applied technologies
- high-quality components, raw material, 100% quality control
- individual selection and production coming from the required parameters and Customer's requirements
- specialized software with high functionality

Today, ESKM is mastered the manufacturing technology of lamel heat exchangers which are completely made out of **austenitic steels**. The technological tools of tubes expanding (mandrelling) are developed after the assembly of air heat exchanger body.

Besides of this, ESKM masters the technology of manufacturing of copper-aluminum lamel heat exchangers.

Application

Apparatuses of air type are widely used in various systems of industrial use and equipment. Namely: for heating, cooling, heat recovery in ventilation and air conditioning systems.

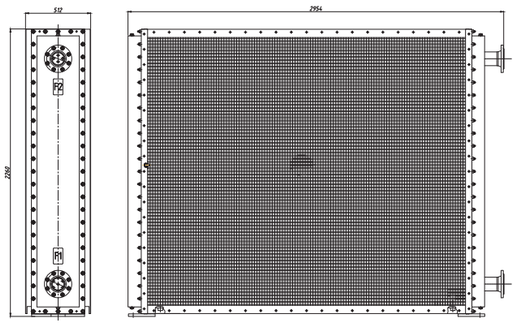

stainless steel version

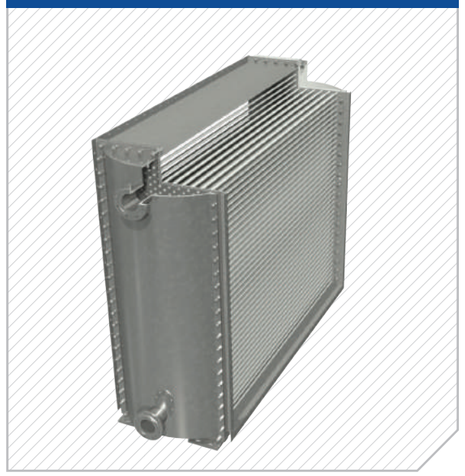

Structure and principle of working

Air cooler apparatus (ACA) is a recuperative heat exchange apparatus. ACA consists of tube bundle with lamels, which is installed in tube boards and closed by covers. The heat exchange surface is formed by a set of tubes assembled in a tube bundle, with corrugated lamels strung on them. Tubes forms parallel channels. Working medium flows through them, which exchanges heat energy with air supplied to the lamels and tubes.
Multi-pass diagram of working medium moving inside the tube space is provided with the help of baffles which are installed inside the covers. The baffles are sealed with gaskets.
Ribbed surface of heat exchange ensures the compactness of the ACA at large thermal loads.
The design of ACA provides the flange joints for connection to the pipings of working medium, moving inside the tube space. ACA is equipped with elements of slinging and supports for fastening on-site.

copper-aluminum version

Structure and principle of working

Heat exchangers consist of body, package of aluminum plates and copper tubes, gathering and distributing collector with heat-resistant covering. Plate package consists of copper tubes on which, by means of mechanical expanding method, aluminum plates with developed surface were installed. Body out of steel protects the package of plates against the damages and ensures the heat exchangers fastening.
Heat exchangers both of standard or individual version are applied. In this regard it is necessary to take into account the features of heat exchanger operating, the presence of contaminating factors in the air.

4.5

Lamel (tube & fin) heat exchangers
air coolers and air heaters

Parameter	AH	AC
Heating capacity	1,5 kW - 90 kW	
Cooling capacity		0,8 kW - 45 kW
Air consumption	200 - 5000 m^3	200 - 6900 m^3
Coolant flow rate	0,05 - 4 m^3/h	0,15 - 7,5 m^3/h
Air temperature at the outlet (depending on the size)	18,4 - 60,4 °C	13,7 -20,5 °C
Aerodynamic resistance	Up to 125 Pa	Up to 277 Pa
Hydraulic resistance	Up to 22 kPa	Up to 27 kPa

Water air heater (WAH) and water air cooler (WAC)

WAH is applied for air heating by transferring of the heat from heat carrier to air. Water, water solution and non-freezing liquids (propylene glycol, ethylene glycol) may be used in the form of heat carrier, the maximum temperature of heat carrier is 150 °C at pressure 27 bar. All air heaters in feeding and gathering collectors are equipped with cranes for air/emptying relief. Regularly, unless otherwise stated, with a diameter collector Dn up to 65 mm, collector joint – thread, more than 65 mm – flange. Regularly, unless otherwise stated, heat exchangers connection is carried out along the countercurrent, heat carrier inlet – to the lower branch pipe, outlet – from the higher. The possible pitch between lamels is 1,8-6,4 m.

Attention: independently of protection means against freezing, water air heaters, operated at the temperature below 0°C, shall be connected to heat supply system with a high-quality heat carrier control, i.e. at constant design flow of heat carrier through the heat exchanger.
WAC is used for air cooling by means of heat transferring from the air to coolant.
The structure of WAC is similar to WAH with the exception of the following:
The possible pitch between lamels is 2,1-6,4 mm. By default, the standard channel version is performed out of stainless steel for condensate collection.

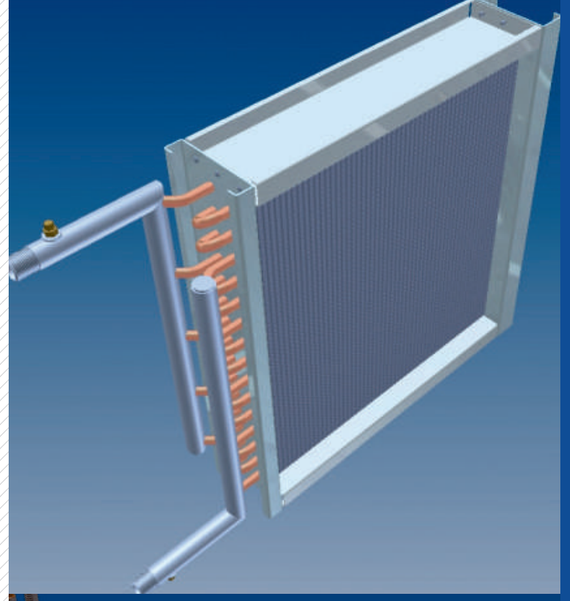

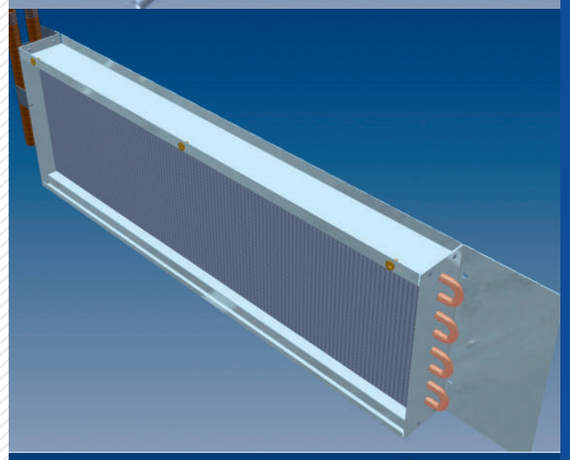

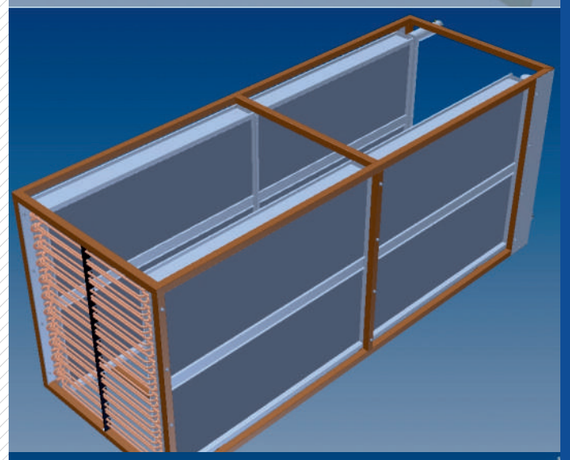

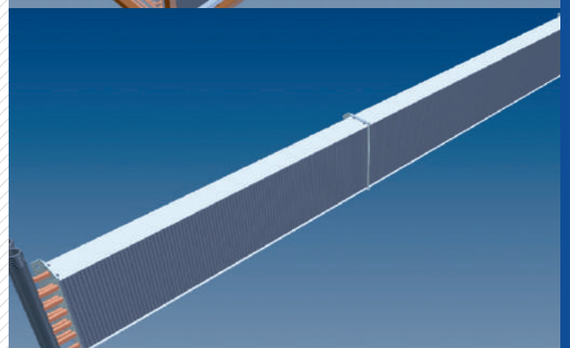

Heat exchange intensification

Advantages of using the technology Spin Cell in the production of heat exchange equipment

- coefficient of heat transfer is in 1.5-2 times higher, than have plate and shell&tube heat exchangers at acceptable pressure losses;
- flow swirling reduces contamination (self-purification effect);
- energy saving - 10% due to clean heat exchangers surface and consistency of thermal performance;
- complete elimination of harmful bypass flows in a combination with a countercurrent circuit;
- weight and dimensions are in several times lower;
- rugged tube structures, operation at high pressures;
- design version out of different steel grades (from carbon to high-alloyed);
- reduced cost of heat exchanges apparatus (HEA) and operating expenses;
- extended warranty period

Main technical characteristics

Power	10 kW - 5 MW
Working temperature	-200 °C - 500 °C
Working pressure	Up to 20 MPa
Samples of body version	Cylindrical or rectangular, single- or multi-pass, sectional or in a single body

Application

- Building heat supply (heating, water-and-gas supply, conditioning for housing and communal services)
- Generation (network heater of low pressure, economizers, oil coolers, condensers, steam generators, waste heat boilers)
- Oil and gas and petrochemical industries (oil heaters, ACA, heaters and gas coolers, condensers and evaporators)
- Cooling in technological processes of metallurgy and machine building
- Food industry (liquid food warmers, milk pasteurizers), medicine
- Heat exchange on transport (rail, sea)

Vladimir, CHPP-2 (sectional HEA for heating and water-and-gas supply)

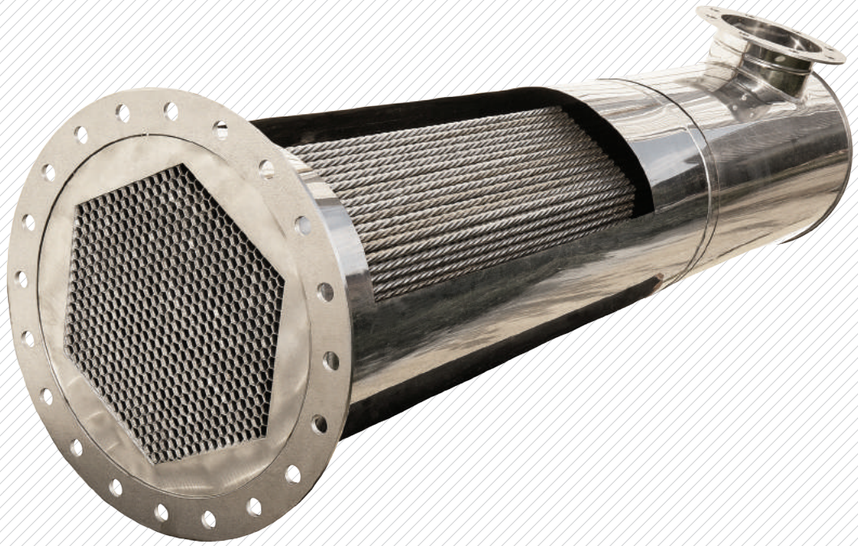

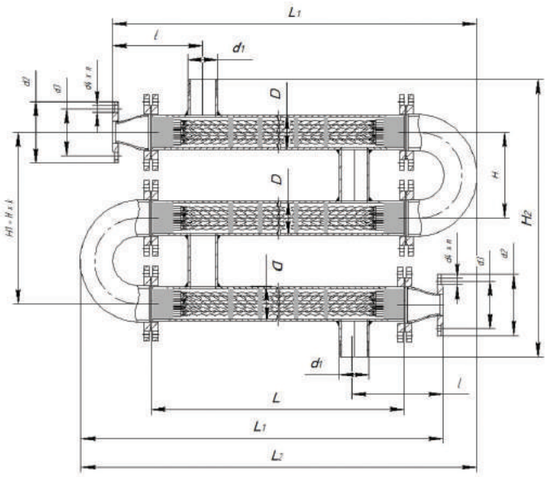

Structure of heat exchangers apparatuses as per technology Spin Cell

Main technology is developed on the basis of performed research and development activities and tested in the mode of experimental-industrial operation.

Structure and manufacturing technology of heat exchanger apparatus Spin Cell are patented and provides the following innovative moments during operation of heat exchange equipment:

- flow swirling inside the multipass heat exchange spiral-profiled tubes (SPT);
- flow swirling in intertubular cells, formed by full spiral ribs of adjacent SPT;
- the possibility “to reduce” intertubular space with pitch smaller than 1, calculated for bundle out of smooth-wall tubes with equivalent hydraulic cells diameter of 4 mm.
- Main technology is developed on the basis of performed research and development activities and tested in the mode of experimental-industrial operation.

Our Customers:
list of supplies

In the supply portfolio of ESKM heat exchange equipment there are different energetic objects with wide geography. There are also nuclear power plants and thermal.

- Smolenskaya NPP
- Kalininskaya NPP
- Leningradskaya NPP-2
- Belarusian NPP

- Nyaganskaya GRES
- Urengoyskaya GRES
- Yuzhnouralskaya GRES-2
- Cherepetskaya GRES
- Cherepovetskaya GRES

- Adler TPP
- Krasnodar CHPP
- Izhevskaya CHPP
- Moscow CHPP-12, CHPP-16, CHPP-20

Totally now, ESKM supplied more than 200 units of heat exchange equipment both of general industrial use and safety classes 3-4 as per NP-001-15 for NPPs.

In the part of supply to the nuclear power facilities, the heat exchangers have version corresponding to safety class 3 as per NP-001-15 (classification designation) group C as per NP-089-1 and safety class 4 as per NP-001-15.

Our Customers are:

- Concern “Rosenergoatom”
- «Atomproject» (Spb)
- «Titan-2»
- «TEK Mosenergo»
- «Group E4»
- «VO «Technopromexport»
- «Atomstroyexport»
- «INTREK Company»

and other companies.

Our Customers: list of supplies

Customer	Object	Type of equipment	Quantity of pieces	Period of supply
JSC"ATOMPROJECT"	Leningradskaya NPP-2	PHE,SPHE, WPHE	more than 80	2010-2016
JSC "Concern TITAN-2"				
JSC "Astiag"				
JSC "Concern TITAN-2"	Belarusian NPP	GPHE and SPHE	more than 15	2016
JSC "SverdNIIchimmash"				
JSC "Concern Rosenergoatom"	Smolenskaya NPP, Kalininskaya NPP	GPHE, STHE, WPHE	5	2012-2014
JSC "ASE"	Yuzhnouralskaya GRES-2	GPHE and WPHE	4	2011
JSC "TEK Mosenergo"	Adler TPP CHPP-16 CHPP-20 CHPP-12	GPHE	more than 30	2010-2012
JSC "Group E4"	Krasnodar CHPP, Nyaganskaya GRES, Cherepovetskaya GRES, Izhevskaya CHPP	GPHE and STHE	more than 30	2010-2013
JSC "VO "Technopromexport"	Urengoyskaya GRES, Cherepetskaya GRES	STHE and GPHE	more than 20	2011-2012
JSC "NPO CKTI"	for testing installations	GPHE	3	2015
"Stroyelectrosevkavmontage", LLC	for production needs	GPHE	4	2011
LLC "Engineering systems and automation"	for production needs	GPHE	1	2012
LLC "INTREK Company"	for production needs	GPHE	4	2013
LLC "Agrofirma Podmoskov-noye"	for production needs	GPHE	2	2009
EFKO "Food Ingredients" LLC	for production needs	GPHE	1	2009
LLC "Aginsk PMK"	for production needs	GPHE	6	2009
	Total		**more than 200**	
Gasketed plate heat exchangers		GPHE		
Welded shell & plate heat exchangers		SPHE		
Welded plate heat exchangers		WPHE		
Shell & tube heat exchangers		STHE		

Terms of delivery

Heat exchangers of safety class 3

as per NP-001-15 group C as per NP-089-15 meet the requirements of GOST 15150, NP-001-15, NP-090-11, NP 031-01, NP-071-06, NP-089-15, PNAE G-7-009-89, PNAE G-7-010-89, RD ЭО 1.1.2.01.0713-2013, RD-03-36-2002, OST 108.004.10-86, STO 79814898 110-2012 or STO 95-114-2013, STO SRO P 60542948-00010-2013 and requirements of working design documentation.

Heat exchangers of safety class 4

as per NP-001-15 meet the requirements of GOST 15150, NP-001-15, NP-090-11, NP 031-01, STO 79814898 110-2012, STO 79814898 106-2008 and requirements of working design documentation. The requirements NP-089-15, PNAE G-7-009-89 and PNAE G-7-010-89 are not applied to these heat exchangers, but in the part of requirements to marking and welded joints these requirements are applied.

Welded joints of elements of heat exchanger internal cavities (welded packages of heat exchanger plates, welded mating flanges, welded protective sleeves, etc.) meet the requirements of PNAE G-7-009-89 (or agreed by material authority company in the established order) and requirements of working design documentation.

At that, in accordance with the requirements of particular order:

- welded joints of heat exchangers elements of safety class 3 as per NP-001-15 (group C as per NP-089-15) depending on working pressure may have the category IIIв or IIIc as per PNAE G-7-010-89;
- welded joints of heat exchangers elements of safety class 4 as per NP-001-15 are subjected to classification as per PNAE G-7-010-89 (according to PNAE G-7-010-89 welded joints are classified on categories I, II, III), but are evaluated as welded joints of the category IIIc as per PNAE G-7-010-89.
- Welded joints of heat exchangers frames elements (rear rack, guides, supports and other not specified above elements) of all safety classes as per NP-001-15 meet the requirements of GOST 14771 and (or) GOST 5264 and requirements of working design documentation.

Our Customers:
list of supplies

Belarusian NPP

The range of type-sizes:

FP 10 – FP 200	gasketed plate heat exchangers
FPB 025 F=136 m², F=68 m²	welded plate heat exchangers
ТОП Series	shell&tube heat exchangers

The samples of purpose:

- Condenser cooler of heating steam
- Heater of boron-containing water
- Heat exchangers of heat carrier outlet
- Regenerative heat exchanger of the first circuit of feeding water
- After-cooler of the first circuit of feeding water
- Heat exchanger of hot water supply system
- Heat exchanger of the intermediate cooling system of non-responsible consumers
- Regenerative heat exchanger of steam generators blowdown
- Drainage expander vapor condenser

Smolenskaya NPP

Kalininskaya NPP

Leningradskaya NPP-2

Our Customers:
list of supplies

Krasnodar CHPP

The range of type-sizes:

FP 40 – FP 81	Gasketed plate heat exchangers
UH 200, UH 300	Shell & tube heat exchangers

The samples of purpose:

- Condensate cooler
- Heater of closed (heating) loop of air heating
- Heaters and coolers of fuel oil
- Peak heater with tubes out of stainless steel

Cherepovetskaya GRES

Izhevskaya CHPP

Nyaganskaya GRES

Our Customers:
list of supplies

Moscow CHPP-12

The range of type-sizes:

FP 16 – FP 150	Gasketed plate heat exchangers

The samples of purpose:

- Heat exchanger of diesel fuel heating on gas-turbine plant
- Dirty condensate cooler
- Primary water heater
- Heat exchanger of closed loop of water cooling

Moscow CHPP-16

Moscow CHPP-20

Adler TPP

Annexes

You can request an electronic version of the catalog by addressing e-mail teploobmen@eskm.net

Besides, questionnaires to order ESKM heat exchange equipment are available for downloading at our website

Questionnaire for ordering a plate heat exchange apparatus (heat power supply)

Questionnaire for ordering a plate heat exchange apparatus (specific working media) as per GOST R ISO 15547-1-2009

Questionnaire for ordering shell & plate heat exchange apparatus

Questionnaire for ordering shell & tube heat exchange apparatus

Contact us

Russia, Tramvaynaya str. 5, Krasnodar, 350911
Russia, Prospect Mira, 106, Moscow, 129626
Tel.: +74997068193, ext. 4
+78612000005, +78612007777
E-mail: teploobmen@eskm.net
www.eskm-teploobmen.ru

Дизайн и верстка каталога – gorbunof creative / www.gorbunof.ru

HEAT EXCHANGE

ESKM

eskm-teploobmen.ru